TABLE OF CONTENTS

01.	3-Way & 2-Way Piston Valve	2
02.	Control Valve	8
03.	Pressure Regulator Valve	14
04.	Lift Check Valve	18
05.	Knuckle Joint	22
06.	4-Way Piston Valve	26
07.	Strainer	30
08.	Liquid Ejector	34
09.	Pan Check Valve	37
10.	Ordering Information	40

WARNING

The products, product features, specifications, designs, availability described in this catalog without limitation are subject to be changed without notice.

3 & 2-WAY PISTON VALVE

■ FEATURES

- On/Off valve.
- Perfect sealing with the disc ring made of PTFE.
- Two stem structure absorbing the impact in the seat.
- Body and Lower Seat Flange made of Stainless Steel.
- Gland Packing made of 4 pieces V-packing that preventing the leak around the stem.
- Spring with Shot peening process that improves the life time.

■ SPECIFICATION

Model Name	3-Way	VP3W-FR(S)	VP3W-SR	VP3W-FD(S)	VP3W-SD
	2-Way	VP2W-FR(S)	VP2W-SR	VP2W-FD(S)	VP2W-SD
Fluids		Steam, Industrial Water, Gas(N_2), Air, Vacuum			
Size (mm)		15A~80A	8A~50A	15A~50A	8A~50A
Operation		Normal Close		Normal Open	
End Connection		Flanged	Threaded	Flanged	Threaded
Material		Body, Lower Seat Flange, Stem : Stainless Steel			
Air Supply		2.5 ~ 3.5 kg/㎠ (36~50psi)			
Temperature		Max.230℃(446˚F)			
Pressure		Max.32kg/㎠ (455psi)			
Body Hydraulic Test		Max.48kg/㎠ (682psi)			

a) JIS, DIN, ANSI are available.

b) (S) means SUS Flange.

c) To prevent the cavitations of flange, the user should use SUS Flange.

d) 2-Way : 3rd port blocked with plug or flat low seat flange is available.

e) No welding flange and body is available.

f) One-stem type is available.

g) Available for High Pressure (JIS 30K, JIS 63K).

h) 3rd port flange is available.

3 & 2-WAY PISTON VALVE

■ Cv VALUE

Size mm(inch)		15A (1/2")	20A (3/4")	25A (1")	32A (1-1/4")	40A (1-1/2")	50A (2")	65A (2-1/2")	80A (3")
Cv	P1→P2	3.98	6.05	10.49	17.36	21.29	28.80	44.70	67.50
	P2→P3	3.94	8.35	12.23	19.69	24.32	32.42	50.60	77.40

■ INSTALLATION

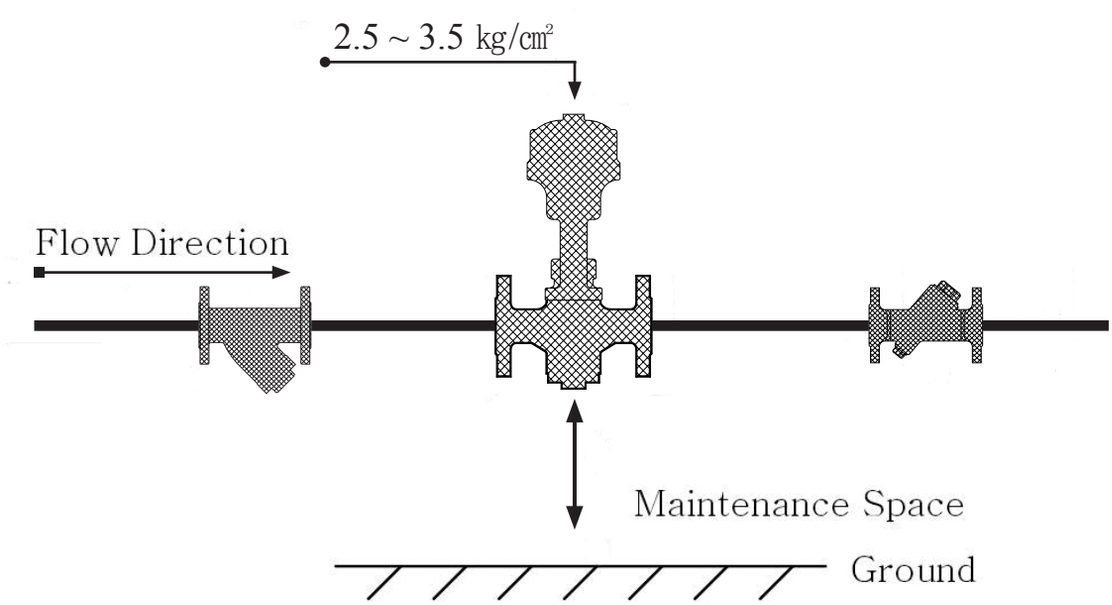

a) Pipe line should be cleaned out by means such as water flushing before installing the valve.

b) Strainer should be installed for good performance and long life of the valve without trouble.
It filters the foreign material in the line.

c) Check valve is installed to prevent the reverse flow.

d) The line should have an enough room to maintenance the 3rd port on the emergency.

3 & 2-WAY PISTON VALVE

■ VP3W-FR

- 3-WAY, NORMAL CLOSE

■ VP2W-FR

- 2-WAY, NORMAL CLOSE

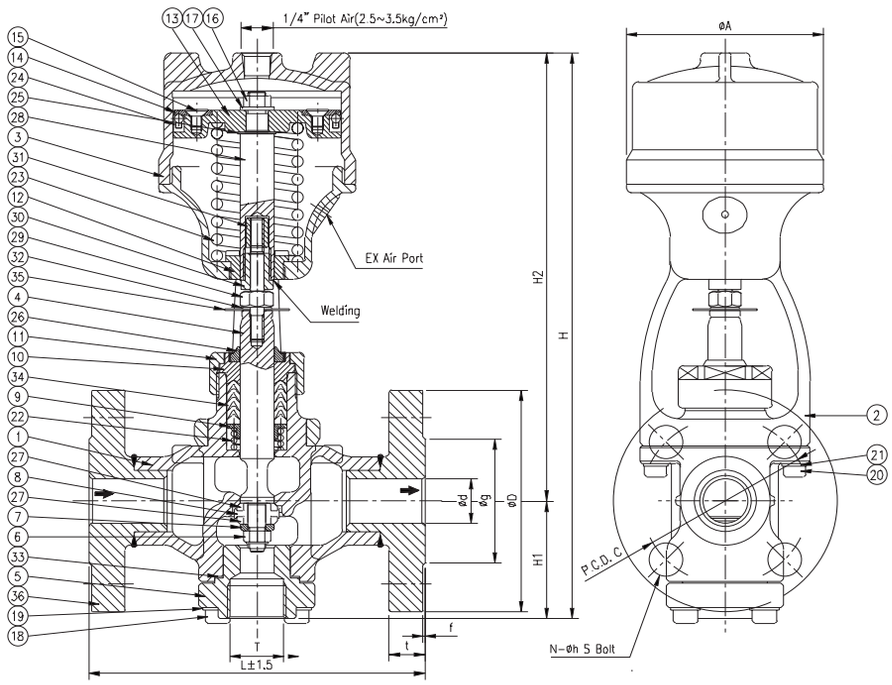

VP3W-FR

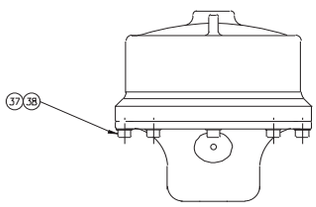

50A, 65A, 80A

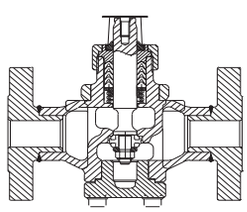

VP2W-FR

■ DIMENSIONS

(Unit : mm)

Valve Size mm(inch)	port d	F to F L	Flange Size(JIS 20K RF) D	C	G	t	f	N	h	s	H1	H2	H	A
□ 15A(1/2")	15	146	95	70	51	14	1	4	15	M12	50	177	227	83
□ 20A(3/4")	20	146	100	75	56	16	1	4	15	M12	54	202	256	91
□ 25A(1")	25	167	125	90	67	16	1	4	19	M16	67	254	321	111
□ 32A(1-1/4")	32	190	135	100	76	18	2	4	19	M16	71	281	352	133
□ 40A(1-1/2")	40	190	140	105	81	18	2	4	19	M16	91	318	409	167.5
□ 50A(2")	50	216	155	120	96	18	2	8	19	M16	102	388	490	208
□ 65A(2-1/2")	65	290	175	140	116	20	2	8	19	M16	104	388	492	208
□ 80A(3")	80	310	200	160	132	22	2	8	23	M20	120	430	550	278

■ PART NAME

NO.	PART NAME	NO.	PART NAME	NO.	PART NAME	NO.	PART NAME
1	BODY	11	GLAND NUT	21	SPRING WASHER	31	SETTING NUT
2	YOKE STAND	12	GUIDE BUSH	22	PACKING SPRING	32	SPRING WASHER
3	CYLINDER	13	PISTON	23	SPRING	33	LOWER SEAT GASKET
4	STEM	14	SET RING PLATE	24	PISTON RING	34	GLAND PACKING
5	LOWER SEAT FLANGE	15	BOLTS	25	PISTON ROD GASKET	35	LIFT RING
6	U-NUT	16	NUT/ROD	26	DUST SEAL	36	FLANGE
7	GUIDE WASHER	17	SPRING WASHER	27	DISC RING	37	SPRING WASHER
8	DISC ADAPTER	18	SOCKET SCREW BOLT	28	PISTON ROD	38	SOCKET SCREW BOLT
9	RING WASHER	19	SPRING WASHER	29	TENSION BOLT		
10	GLAND	20	SOCKET SCREW BOLT	30	COMPRESS NUT		

3 & 2-WAY PISTON VALVE

■ VP3W-FD

- 3-WAY, NORMAL OPEN

■ VP2W-FD

- 2-WAY, NORMAL OPEN

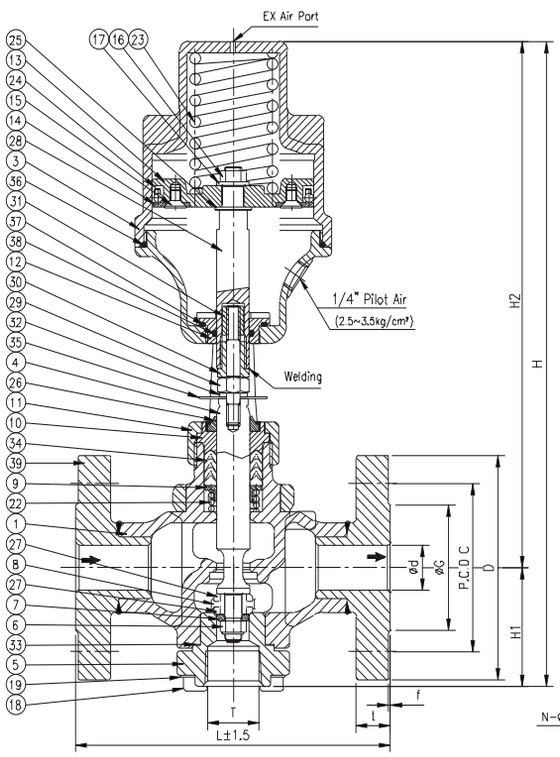

VP3W-FD

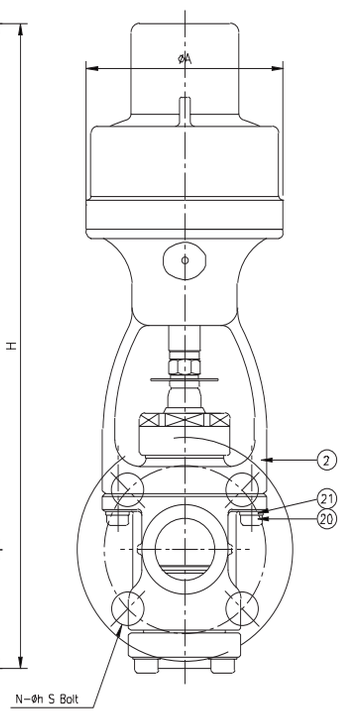

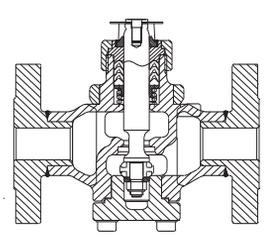

VP2W-FD

■ DIMENSIONS

(Unit : mm)

	Valve Size mm(inch)	port d	F to F	Flange Size(JIS 20K RF)								H1	H2	H	A
			L	D	C	G	t	f	N	h	s				
□	15A(1/2")	15	146	95	70	51	14	1	4	15	M12	50	195	245	83
□	20A(3/4")	20	146	100	75	56	16	1	4	15	M12	54	229	283	91
□	25A(1")	25	167	125	90	67	16	1	4	19	M16	67	303	370	111
□	32A(1-1/4")	32	190	135	100	76	18	2	4	19	M16	71	334	405	133
□	40A(1-1/2")	40	190	140	105	81	18	2	4	19	M16	91	386	477	167.5
□	50A(2")	50	216	155	120	96	18	2	8	19	M16	102	453	555	191

■ PART NAME

NO.	PART NAME	NO.	PART NAME	NO.	PART NAME	NO.	PART NAME
1	BODY	11	GLAND NUT	21	SPRING WASHER	31	SETTING NUT
2	YOKE STAND	12	GUIDE BUSH	22	PACKING SPRING	32	SPRING WASHER
3	CYLINDER	13	PISTON	23	SPRING	33	LOWER SEAT GASKET
4	STEM	14	SET RING PLATE	24	PISTON RING	34	GLAND PACKING
5	LOWER SEAT FLANGE	15	BOLTS	25	PISTON ROD GASKET	35	LIFT RING
6	U-NUT	16	NUT/ROD	26	DUST SEAL	36	O-RING
7	GUIDE WASHER	17	SPRING WASHER	27	DISC RING	37	O-RING
8	DISC ADAPTER	18	SOCKET SCREW BOLT	28	PISTON ROD	38	O-RING
9	RING WASHER	19	SPRING WASHER	29	TENSION BOLT	39	FLANGE
10	GLAND	20	SOCKET SCREW BOLT	30	COMPRESS NUT		

3 & 2-WAY PISTON VALVE

■ VP3W-SR

- 3-WAY, NORMAL CLOSE

■ VP2W-SR

- 2-WAY, NORMAL CLOSE

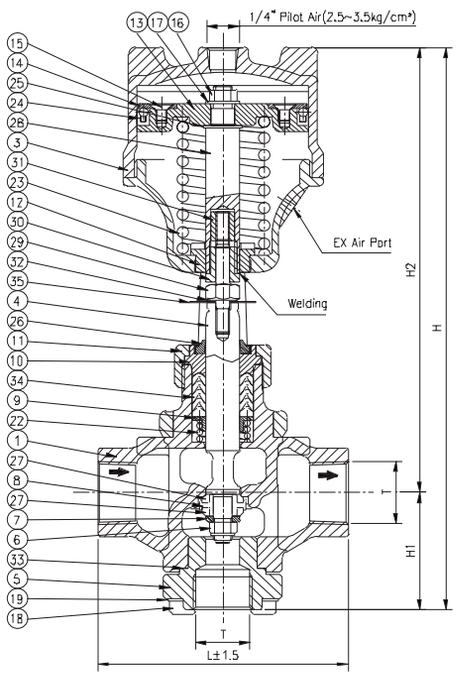

VP3W-SR

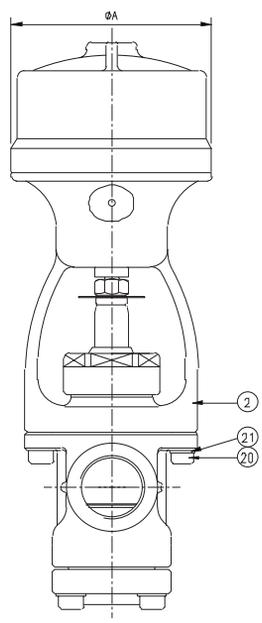

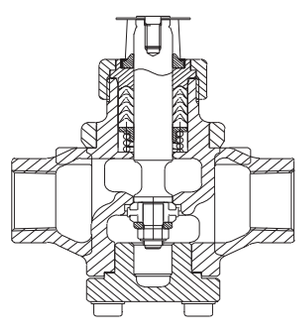

VP2W-SR

■ DIMENSIONS

(Unit : mm)

Valve Size mm(inch)	Thread T	L	H1	H2	H	A
□ 8A(1/4")	1/4"	85	50	177	227	83
□ 10A(3/8")	3/8"	85	50	177	227	83
□ 15A(1/2")	1/2"	85	50	177	227	83
□ 20A(3/4")	3/4"	110	54	202	256	91
□ 25A(1")	1"	120	67	254	321	111
□ 32A(1-1/4")	1-1/4"	145	71	281	352	133
□ 40A(1-1/2")	1-1/2"	150	91	318	409	167.5
□ 50A(2")	2"	174	102	388	490	208

■ PART NAME

NO.	PART NAME	NO.	PART NAME	NO.	PART NAME	NO.	PART NAME
1	BODY	11	GLAND NUT	21	SPRING WASHER	31	SETTING NUT
2	YOKE STAND	12	GUIDE BUSH	22	PACKING SPRING	32	SPRING WASHER
3	CYLINDER	13	PISTON	23	SPRING	33	LOWER SEAT GASKET
4	STEM	14	SET RING PLATE	24	PISTON RING	34	GLAND PACKING
5	LOWER SEAT FLANGE	15	BOLTS	25	PISTON ROD GASKET	35	LIFT RING
6	U-NUT	16	NUT/ROD	26	DUST SEAL		
7	GUIDE WASHER	17	SPRING WASHER	27	DISC RING		
8	DISC ADAPTER	18	SOCKET SCREW BOLT	28	PISTON ROD		
9	RING WASHER	19	SPRING WASHER	29	TENSION BOLT		
10	GLAND	20	SOCKET SCREW BOLT	30	COMPRESS NUT		

3 & 2-WAY PISTON VALVE

■ VP3W-SD

- 3-WAY, NORMAL OPEN

■ VP2W-SD

- 2-WAY, NORMAL OPEN

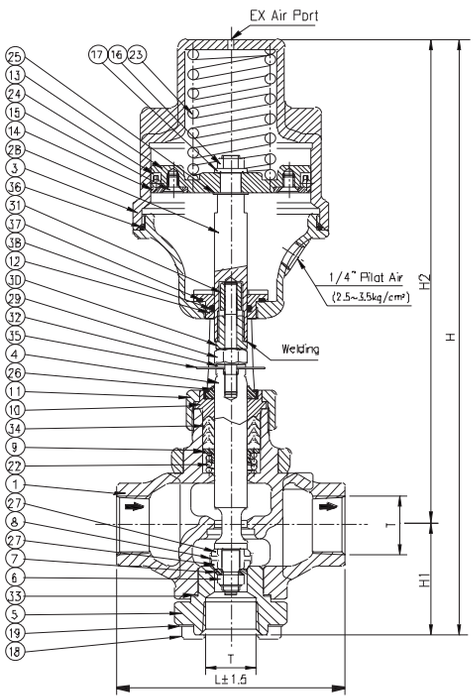

VP3W-SD

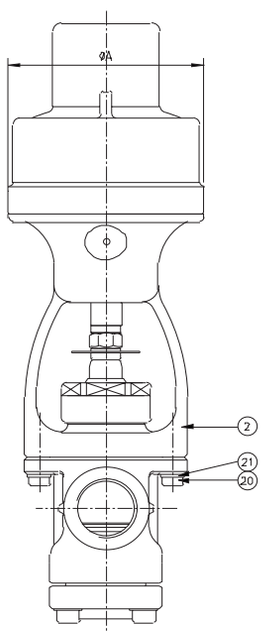

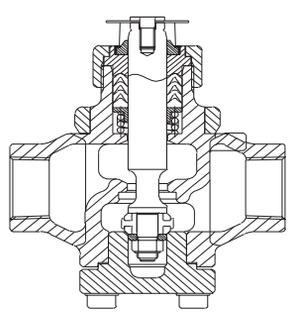

VP2W-SD

■ DIMENSIONS

(Unit : mm)

Valve Size mm(inch)	Thread T	L	H1	H2	H	A
□ 8A(1/4")	1/4"	85	50	195	245	83
□ 10A(3/8")	3/8"	85	50	195	245	83
□ 15A(1/2")	1/2"	85	50	195	245	83
□ 20A(3/4")	3/4"	110	54	229	283	91
□ 25A(1")	1"	120	67	303	370	111
□ 32A(1-1/4")	1-1/4"	145	71	334	405	133
□ 40A(1-1/2")	1-1/2"	150	91	386	477	167.5
□ 50A(2")	2"	174	102	453	555	191

■ PART NAME

NO.	PART NAME	NO.	PART NAME	NO.	PART NAME	NO.	PART NAME
1	BODY	11	GLAND NUT	21	SPRING WASHER	31	SETTING NUT
2	YOKE STAND	12	GUIDE BUSH	22	PACKING SPRING	32	SPRING WASHER
3	CYLINDER	13	PISTON	23	SPRING	33	LOWER SEAT GASKET
4	STEM	14	SET RING PLATE	24	PISTON RING	34	GLAND PACKING
5	LOWER SEAT FLANGE	15	BOLTS	25	PISTON ROD GASKET	35	LIFT RING
6	U-NUT	16	NUT/ROD	26	DUST SEAL	36	O-RING
7	GUIDE WASHER	17	SPRING WASHER	27	DISC RING	37	O-RING
8	DISC ADAPTER	18	SOCKET SCREW BOLT	28	PISTON ROD	38	O-RING
9	RING WASHER	19	SPRING WASHER	29	TENSION BOLT		
10	GLAND	20	SOCKET SCREW BOLT	30	COMPRESS NUT		

CONTROL VALVE

■ FEATURES

- The valve controls pressure and temperature.
- Multi Spring for more precise proportional control.
- Body seat and plug having “Stellite Welding”.
- Lapping satisfying ANSI CLASS V LEVEL (Control Valve Seat Leakage).
- Spring with Shot peening process that improves the life time.
- Body and Plug are Stainless Steel.
- Single Seat and Globe Control Valve.

■ SPECIFICATION

Model Name	Linear	VCM-1000F(S)	VCM-1000S	VOM-1000F(S)	VOM-1000S
	Equal Percent	VCM-1100F(S)	VCM-1100S	VOM-1100F(S)	VOM-1100S
Fluids		Steam, Industrial Water, Gas(N_2), Air			
Size (mm)		15A~40A(VCM-1100F : 15A~80A)			
Operation		Normal Close		Normal Open	
End Connection		Flanged	Threaded	Flanged	Threaded
Material		Body : Stainless Steel, Plug and Seat : Stellited(Welding)			
Flow Characteristic		Linear / Equal %			
Spring Range : △P		0.2 ~ 1.0㎏/㎠ (2.9~14.0psi) : △P Max.7 ㎏/㎠ 0.4~1.2㎏/㎠ (5.7~17.1psi) : △P Max.16 ㎏/㎠ 0.8~2.4㎏/㎠ (11~34.0psi) : △P Max.24 ㎏/㎠			
Temperature		Linear : Max.220℃ (428˚F) / Equal : Max.250℃ (482˚F)			
Pressure		Max.32㎏/㎠ (455psi)			
Seat Type		Single Seated			
Body Hydraulic Test		Max.48㎏/㎠ (682psi)			

a) JIS, DIN, ANSI are available.

b) (S) means SUS Flange.

c) E/P positioner is available.

d) △P means Differential Pressure. △P=P1-P2.

e) △P of 65A, 80A is Max. 4㎏/㎠(spring rang 0.2~1.0㎏/㎠) or Max. 18㎏/㎠(spring rang 0.8~2.4㎏/㎠).

■ Cv VALUE

Size mm(inch)		15A (1/2")	20A (3/4")	25A (1")	32A (1-1/4")	40A (1-1/2")	50A (2")	65A (2-1/2")	80A (3")
Cv	VCM-1000S/F	5.35	5.35	7.98	21.38	21.38	-	-	-
	VCM-1100S/F	4.81	5.35	8.02	21.29	21.29	32.13	51.00	71.00

CONTROL VALVE

■ FLOW CHARACTERISTIC

● Inherent Flow Characteristic

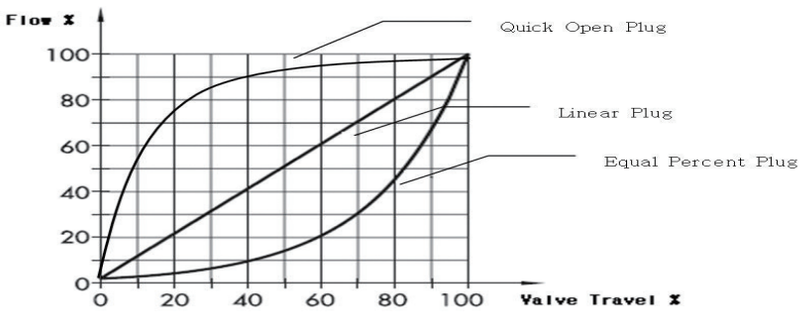

a) Plug Shape.

b) The chart does not include actual system variables.

c) In the actual installed flow characteristic, the Equal Percent becomes more Linear and the Linear becomes more Quick Open.

■ INSTALLATION

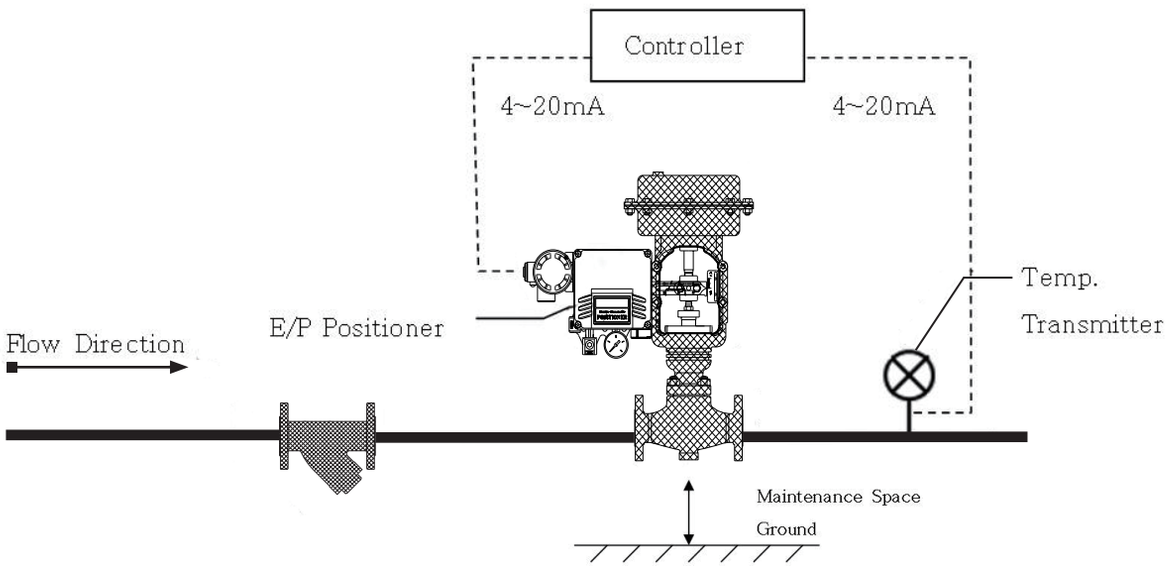

a) The control valve should be connected with E/P positioner or I/P converter.

b) In case of purchasing the valve with E/P positioner, it is supplied after Zero and Span is fixed. But when the user uses I/P converter, the user should arrange Zero and Span of I/P.

c) To protect the valve, the strainer should be installed prior to the valve.

CONTROL VALVE

■ VCM-1100F

- NORMAL CLOSE, EQUAL PERCENT

■ VOM-1100F

- NORMAL OPEN, EQUAL PERCENT

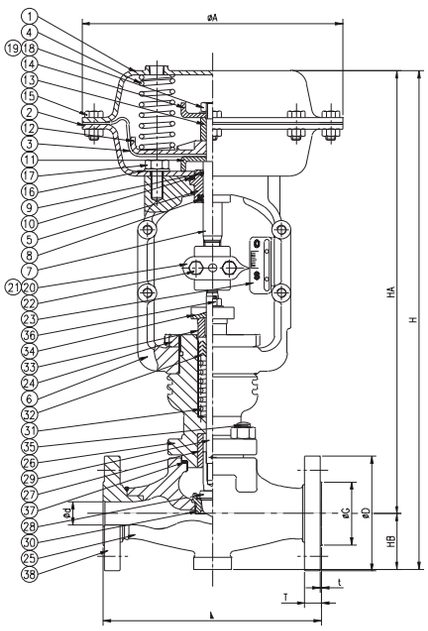

VCM-1100F

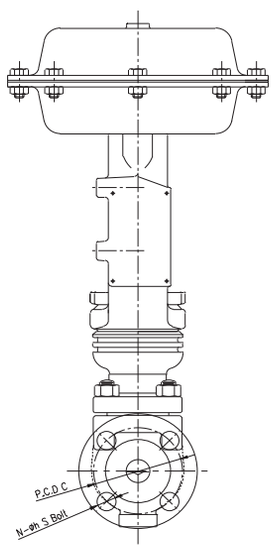

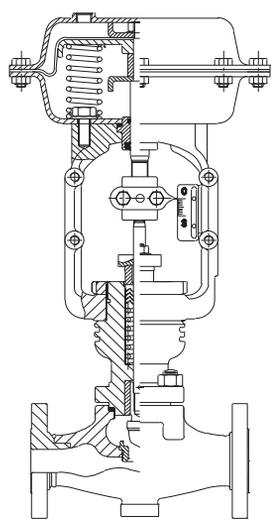

VOM-1100F

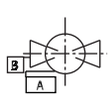

□ A : POSITIONER

□ B : AIR REGULATOR

[NOTE]

	Air Signal	Spring Q'ty
□	0.2~1.0kg/㎠	4
□	0.4~1.2kg/㎠	6
□	0.8~2.4kg/㎠	8

■ DIMENSIONS

(Unit : mm)

	Valve Size mm(inch)	L (Pace to Pace)	øA	HB	HA	H	Port d	Flange Size(JIS 20K RF)							
								D	C	G	T	f	N	h	s
□	15A(1/2")	190	220	54	383	437	15	95	70	51	14	1	4	15	M12
□	20A(3/4")	194	220	54	383	437	20	100	75	56	16	1	4	15	M12
□	25A(1")	197	270	54	387	441	25	125	90	67	16	1	4	19	M16
□	32A(1-1/4")	235	320	83	466	549	32	135	100	76	18	2	4	19	M16
□	40A(1-1/2")	235	320	83	466	549	40	140	105	81	18	2	4	19	M16
□	50A(2")	267	320	83	466	549	50	155	120	96	18	2	8	19	M16
□	65A(2-1/2")	292	320	102	492	594	65	175	140	116	20	2	8	19	M16
□	80A(3")	318	320	102	492	594	80	200	160	132	22	2	8	23	M20

■ PART NAME

NO.	PART NAME	NO.	PART NAME	NO.	PART NAME	NO.	PART NAME
1	UPPER DIAPHRAGM CASE	11	DIAPHRAGM RETAINER	21	STEM CONNECTION	31	PACKING SPRING
2	LOWER DIAPHRAGM CASE	12	DIAPHRAGM PLATE	22	BOLTS/NUTS	32	PACKING
3	DIAPHRAGM	13	STOPPER COLLAR	23	SCALE PLATE	33	PACKING SUPPORTER
4	COIL SPRING	14	STOPPER RING	24	LOCK NUT	34	SUPPORTER FLANGE
5	GUIDE SEAL BOX	15	BOLTS/NUTS	25	BODY	35	STUD BOLTS/NUTS
6	YOKE	16	GASKET	26	BONNET	36	STUD BOLTS/NUTS
7	ACTUATOR STEM	17	BOLTS	27	GUIDE BUSH	37	GASKET
8	WAFER	18	SPRING WASHER	28	PLUG	38	FLANGE
9	O-RING	19	NUT	29	VALVE STEM		
10	O-RING	20	STEM CONNECTION	30	SEAT		

CONTROL VALVE

■ VCM-1100S

- NORMAL CLOSE, EQUAL PERCENT

■ VOM-1100S

- NORMAL OPEN, EQUAL PERCENT

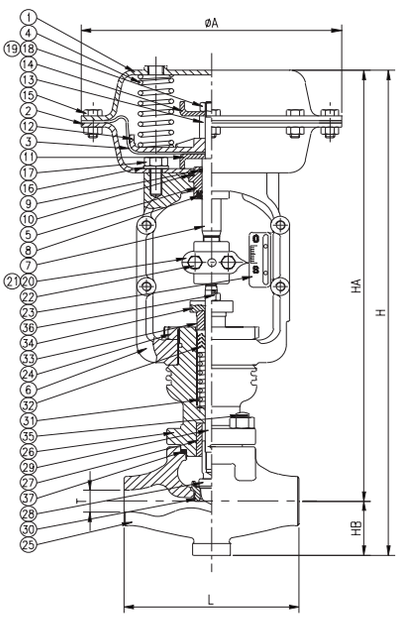

VCM-1100S

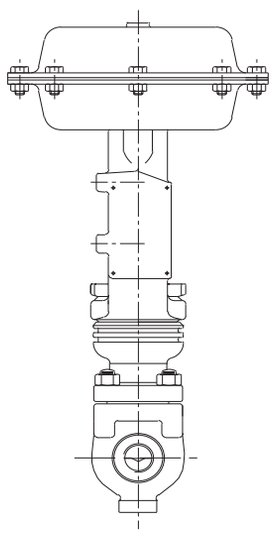

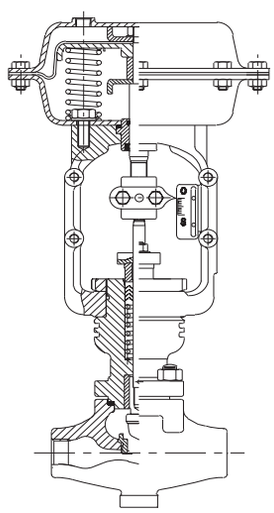

VOM-1100S

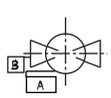

□ A : POSITIONER

□ B : AIR REGULATOR

[NOTE]

	Air Signal	Spring Q'ty
□	0.2~1.0kg/㎠	4
□	0.4~1.2kg/㎠	6
□	0.8~2.4kg/㎠	8

■ DIMENSIONS

(Unit : mm)

	Valve Size mm(inch)	Thread T	L(Pace to Pace)	øA	HB	HA	H
□	15A(1/2")	1/2"	154	220	54	383	437
□	20A(3/4")	3/4"	154	220	54	383	437
□	25A(1")	1"	154	270	54	387	441
□	32A(1-1/4")	1-1/4"	187	320	83	466	549
□	40A(1-1/2")	1-1/2"	187	320	83	466	549

■ PART NAME

NO.	PART NAME	NO.	PART NAME	NO.	PART NAME	NO.	PART NAME
1	UPPER DIAPHRAGM CASE	11	DIAPHRAGM RETAINER	21	STEM CONNECTION	31	PACKING SPRING
2	LOWER DIAPHRAGM CASE	12	DIAPHRAGM PLATE	22	BOLTS/NUTS	32	PACKING
3	DIAPHRAGM	13	STOPPER COLLAR	23	SCALE PLATE	33	PACKING SUPPORTER
4	COIL SPRING	14	STOPPER RING	24	LOCK NUT	34	SUPPORTER FLANGE
5	GUIDE SEAL BOX	15	BOLTS/NUTS	25	BODY	35	STUD BOLTS/NUTS
6	YOKE	16	GASKET	26	BONNET	36	STUD BOLTS/NUTS
7	ACTUATOR STEM	17	BOLTS	27	GUIDE BUSH	37	GASKET
8	WAFER	18	SPRING WASHER	28	PLUG		
9	O-RING	19	NUT	29	VALVE STEM		
10	O-RING	20	STEM CONNECTION	30	SEAT		

CONTROL VALVE

■ VCM-1000F

- NORMAL CLOSE, LINEAR

■ VOM-1000F

- NORMAL OPEN, LINEAR

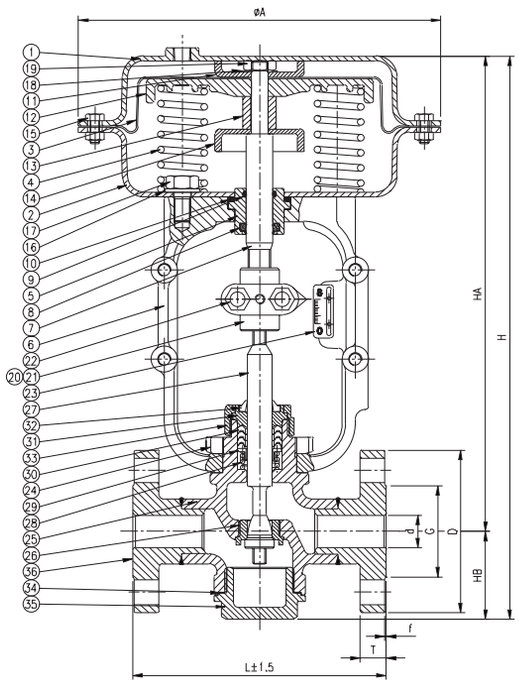

VCM-1000F

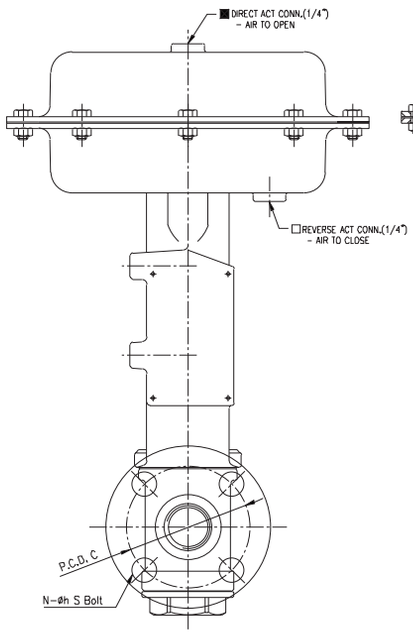

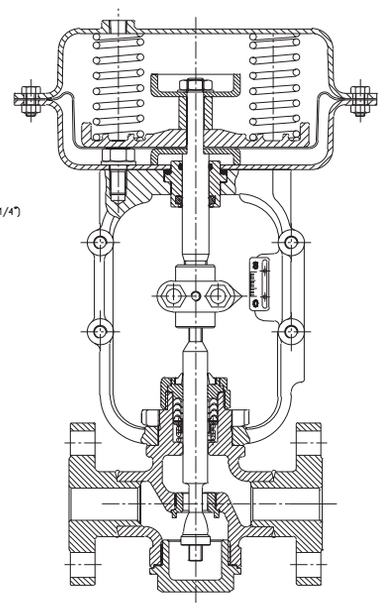

VOM-1000F

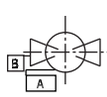

□ A : POSITIONER

□ B : AIR REGULATOR

[NOTE]

	Air Signal	Spring Q'ty
□	0.2~1.0kg/㎠	4
□	0.4~1.2kg/㎠	6
□	0.8~2.4kg/㎠	8

■ DIMENSIONS

(Unit : mm)

	Valve Size mm(inch)	L (Pace to Pace)	øA	HB	HA	H	Port d	Flange Size(JIS 20K RF)							
								D	C	G	T	f	N	h	s
□	15A(1/2")	154	220	54	296	350	15	95	70	51	14	1	4	15	M12
□	20A(3/4")	154	220	54	296	350	20	100	75	56	16	1	4	15	M12
□	25A(1")	164	270	62	317	379	25	125	90	67	16	1	4	19	M16
□	32A(1-1/4")	203	320	77	372	449	32	135	100	76	18	2	4	19	M16
□	40A(1-1/2")	203	320	77	372	449	40	140	105	81	18	2	4	19	M16

■ PART NAME

NO.	PART NAME	NO.	PART NAME	NO.	PART NAME	NO.	PART NAME
1	UPPER DIAPHRAGM CASE	11	DIAPHRAGM RETAINER	21	STEM CONNECTION	31	GLAND
2	LOWER DIAPHRAGM CASE	12	DIAPHRAGM PLATE	22	BOLTS/NUTS	32	DUST SEAL
3	DIAPHRAGM	13	STOPPER COLLAR	23	SCALE PLATE	33	GLAND NUT
4	COIL SPRING	14	STOPPER RING	24	LOCK NUT	34	COVER GASKET
5	GUIDE SEAL BOX	15	BOLTS/NUTS	25	BODY	35	COVER
6	YOKE	16	GASKET	26	SEAT	36	FLANGE
7	ACTUATOR STEM	17	BOLTS	27	VALVE STEM		
8	WAFER	18	SPRING WASHER	28	PACKING SPRING		
9	O-RING	19	NUT	29	RING WASHER		
10	O-RING	20	STEM CONNECTION	30	GLAND PACKING		

CONTROL VALVE

■ VCM-1000S

- NORMAL CLOSE, LINEAR

■ VOM-1000S

- NORMAL OPEN, LINEAR

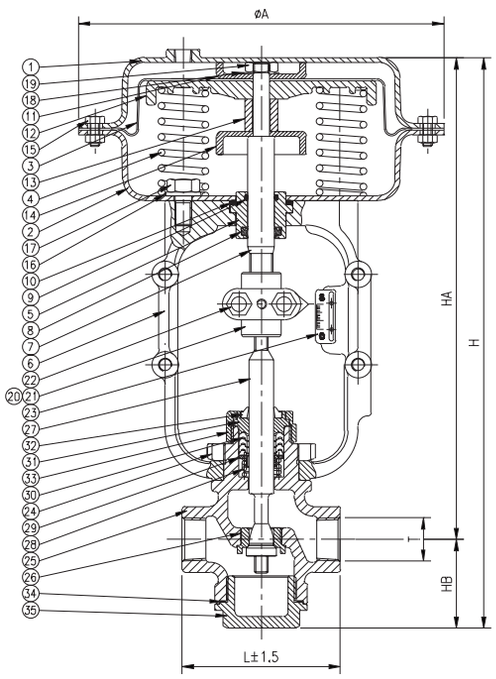

VCM-1000S

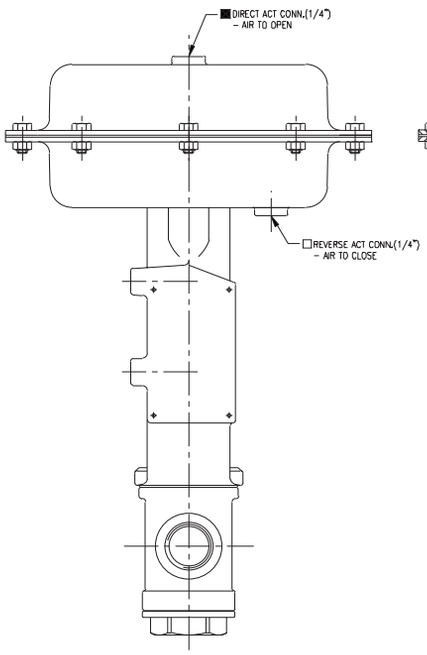

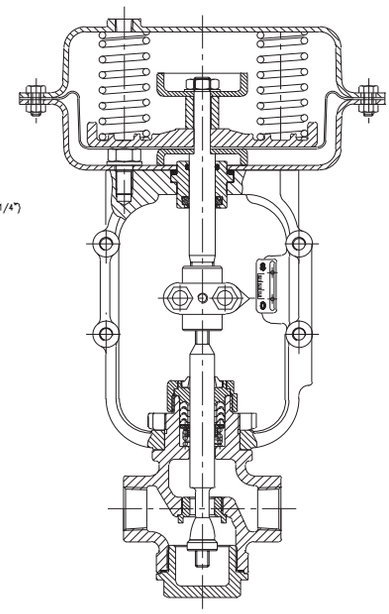

VOM-1000S

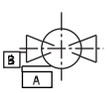

□ A : POSITIONER

□ B : AIR REGULATOR

[NOTE]

	Air Signal	Spring Q'ty
□	0.2~1.0kg/㎠	4
□	0.4~1.2kg/㎠	6
□	0.8~2.4kg/㎠	8

■ DIMENSIONS

(Unit : mm)

	Valve Size mm(inch)	Thread T	L(Pace to Pace)	øA	HB	HA	H
□	15A(1/2")	1/2"	95	220	54	296	350
□	20A(3/4")	3/4"	95	220	54	296	350
□	25A(1")	1"	100	270	62	317	379
□	32A(1-1/4")	1-1/4"	130	320	77	372	449
□	40A(1-1/2")	1-1/2"	130	320	77	372	449

■ PART NAME

NO.	PART NAME	NO.	PART NAME	NO.	PART NAME	NO.	PART NAME
1	UPPER DIAPHRAGM CASE	11	DIAPHRAGM RETAINER	21	STEM CONNECTION	31	GLAND
2	LOWER DIAPHRAGM CASE	12	DIAPHRAGM PLATE	22	BOLTS/NUTS	32	DUST SEAL
3	DIAPHRAGM	13	STOPPER COLLAR	23	SCALE PLATE	33	GLAND NUT
4	COIL SPRING	14	STOPPER RING	24	LOCK NUT	34	COVER GASKET
5	GUIDE SEAL BOX	15	BOLTS/NUTS	25	BODY	35	COVER
6	YOKE	16	GASKET	26	SEAT		
7	ACTUATOR STEM	17	BOLTS	27	VALVE STEM		
8	WAFER	18	SPRING WASHER	28	PACKING SPRING		
9	O-RING	19	NUT	29	RING WASHER		
10	O-RING	20	STEM CONNECTION	30	GLAND PACKING		

PRESSURE REGULATOR VALVE

■ FEATURES

- The valve reduces the pressure.
- Diaphragm that can response rapidly to the pilot air supply and strong to endure the foreign materials.
- Diaphragm is used longer than metal plate or bellows and is economical.
- Easy installment and maintenance.
- Perfect sealing with the disc made of Carbon Graphite PTFE.
- The valve can be used not only the steam line but also gas line.

■ SPECIFICATION

Model Name	SRV-1100S	SRV-1100F	SRV-1100FS
Fluids	Steam, Industrial Water, Gas(N_2)		
Size(mm)	15A,20A,25A,40A,50A		
End Connection	Threaded	Flanged (A105)	Flanged (SCS13)
Material	Body : Stainless Steel / Diaphragm : PTFE / Disc : Carbon Graphite PTFE.		
Reducing Rate	1:1(15A,20A), 1:0.8(25A,40A,50A)		
Temperature	Max.230℃ (446˚F)		
Operating Pressure	Max.15㎏/㎠ (213 psi)		
Body Hydraulic Test	Max.48㎏/㎠ (683psi)		

a) JIS, DIN, ANSI are available.

b) Size 32A is not available.

c) Reducing Rate can be changed at the actual line.

PRESSURE REGULATOR VALVE

■ PRESSURE REGULATOR VALVE FLOW

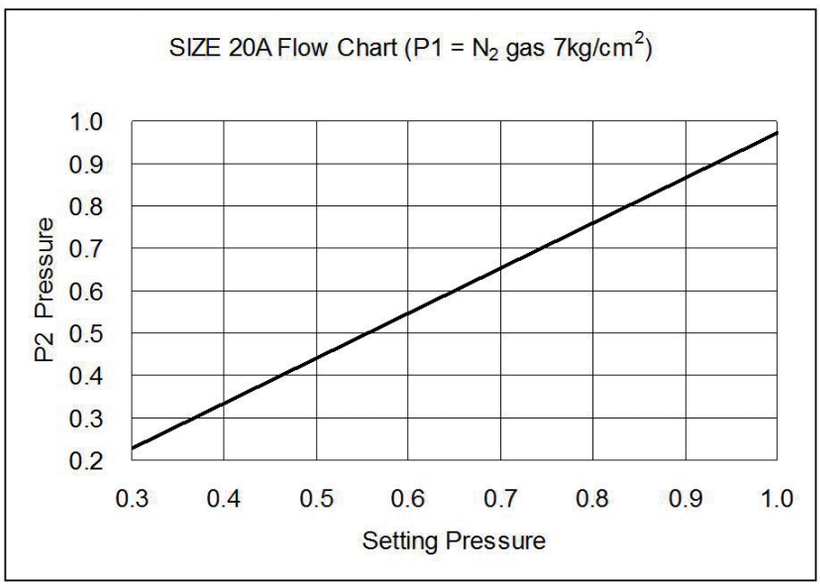

a) The inlet pressure is 7㎏/㎠.

b) Size 20A (Ratio 1 : 1), Size 25A (Ratio 1 : 0.8)

c) At the actual line, the data can be changed.

■ INSTALLATION

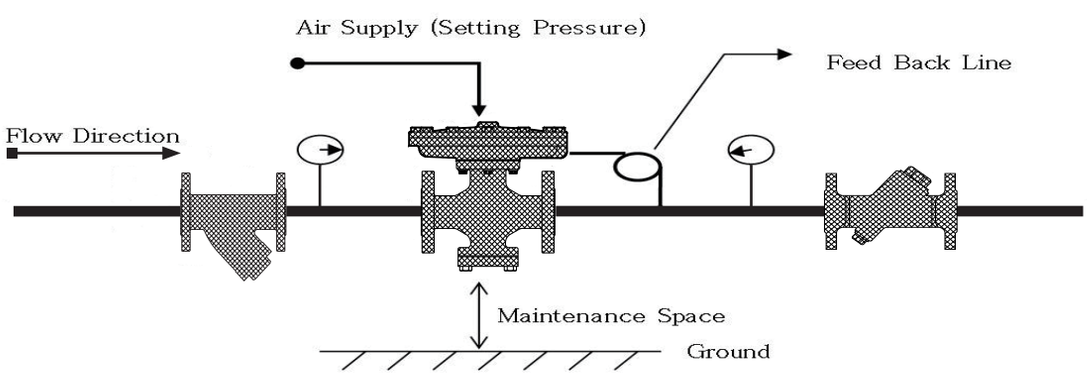

a) The pilot air supply is the setting pressure.

b) Setting Pressure is supplied from I/P Converter or Air Regulator.

c) Because the reducing Rate is changed at the actual line, I/P converter or Air regulator needs to be calibrated to get the required 2nd port pressure.

d) The gauge is installed to check the reduced pressure at the 2nd port.

e) Flushing of the pipe lines thoroughly is required before the installment of the valve.

f) Pressure Regulator Valve should be vertical to horizontal piping.

g) Lift Check Valve is installed to prevents the reverse flow.

h) To protect the valve, the strainer should be installed prior to the valve.

i) Feed back line should be spiral.

PRESSURE REGULATOR VALVE

■ SRV-1100F

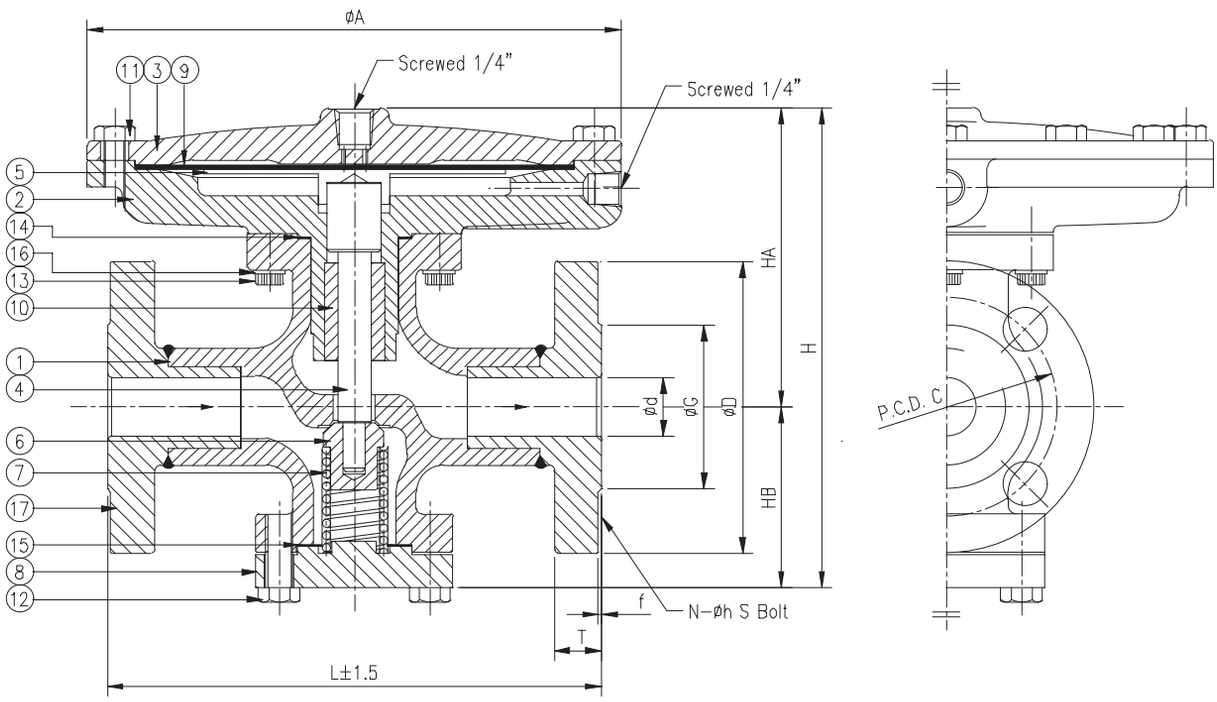

■ DIMENSIONS

(Unit : mm)

	Valve Size mm(inch)	port d	L	A	Flange Size(JIS 20K RF)								HB	HA	H
					D	C	G	T	f	N	h	S			
□	15A(1/2")	15	180	195	95	70	51	14	1	4	15	M12	67	113	180
□	20A(3/4")	20	180	195	100	75	56	16	1	4	15	M12	67	113	180
□	25A(1")	25	212	235	125	90	67	16	1	4	19	M16	74	119	193
□	40A(1-1/2")	40	222	195	140	105	81	18	2	4	19	M16	84	134	218
□	50A(2")	50	222	195	155	120	96	18	2	8	19	M16	84	134	218

■ PART NAME

NO.	PART NAME	NO.	PART NAME
1	BODY	11	HEXA HEAD BOLT
2	CYLINDER COVER	12	HEXA HEAD BOLT
3	COVER	13	SOCKET SCREW BOLT
4	DIAPHRAGM ROD	14	CYLINDER COVER GASKET
5	DIAPHRAGM PLATE	15	BOTTOM COVER GASKET
6	DISC	16	SPRING WASHER
7	SPRING	17	FLANGE
8	BOTTOM COVER		
9	DIAPHRAGM		
10	BUSH		

PRESSURE REGULATOR VALVE

■ SRV-1100S

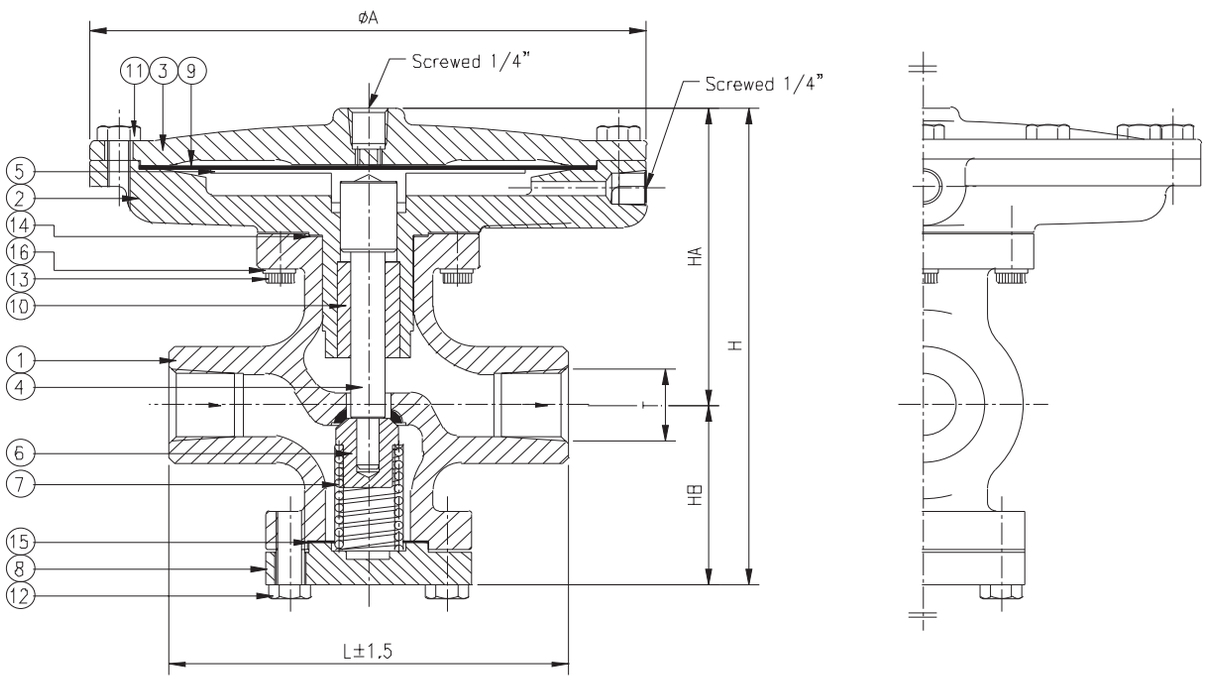

■ DIMENSIONS

(Unit : mm)

Valve Size mm(inch)	Thread T	L	A	HB	HA	H
□ 15A(1/2")	1/2"	140	195	67	113	180
□ 20A(3/4")	3/4"	140	195	67	113	180
□ 25A(1")	1"	165	235	74	119	193
□ 40A(1-1/2")	1-1/2"	180	235	84	134	218
□ 50A(2")	2"	180	235	84	134	218

■ PART NAME

NO.	PART NAME	NO.	PART NAME
1	BODY	11	HEXA HEAD BOLT
2	CYLINDER COVER	12	HEXA HEAD BOLT
3	COVER	13	SOCKET SCREW BOLT
4	DIAPHRAGM ROD	14	CYLINDER COVER GASKET
5	DIAPHRAGM PLATE	15	BOTTOM COVER GASKET
6	DISC	16	SPRING WASHER
7	SPRING		
8	BOTTOM COVER		
9	DIAPHRAGM		
10	BUSH		

LIFT CHECK VALVE

■ FEATURES

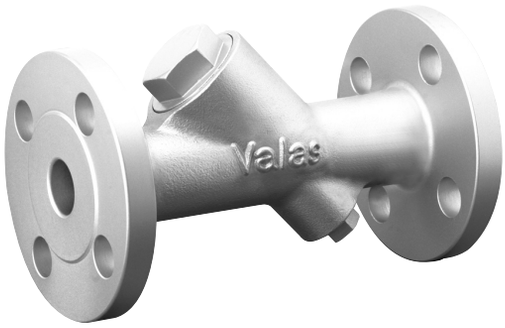

- The valve prevents the back flow on system shutdown.
- Prevention of flooding.
- Y-type suitable to high pressure.
- Perfect sealing with the disc seat made of Carbon Graphite PTFE.
- Protection of any item of equipment that can be affected by reverse flow, such as strainers and control valves.
- To check the pressure surges associated with hydraulic forces, for example, water hammer. These hydraulic forces can cause a wave of pressure to run up and down pipe work until the energy is dissipated.
- It is designed only for installation in horizontal pipelines.
- The valve is robust and requires little maintenance.

■ SPECIFICATION

Model Name	V353-S	V353-F	V353-FS
Fluids	Steam, Industrial Water, Gas(N_2), Air, Vacuum		
Size(mm)	15A~50A	15A~80A	
End Connection	Threaded	Flanged (A105)	Flanged (SCS13)
Material	Flanged (SCS13)		
Opening Pressure	Min. 0.1 kg/㎠ (1.4psi)		
Mounting	Horizontal		
TemperaturePressure	Max.230℃ (446˚F)		
Pressure	Max.32 kg/㎠ (455psi)		
Body Hydraulic Test	Max.48 kg/㎠ (682psi)		

a) JIS, ANSI, DIN are available.

b) Min Opening Pressure (Spring Tension) can be arranged according to the clients request.

c) Available for High Pressure (JIS 30K).

LIFT CHECK VALVE

■ Opening Pressure

Size mm(inch)	Opening Pressures (kg/㎠)		
	Direction of flow with spring		
	↑	→	↓
15A(1/2")	0.102	0.100	0.090
20A(3/4")	0.103	0.100	0.098
25A(1")	0.102	0.100	0.093
32A(1-1/4")	0.101	0.100	0.097
40A(1-1/2")	0.102	0.100	0.098

■ INSTALLATION

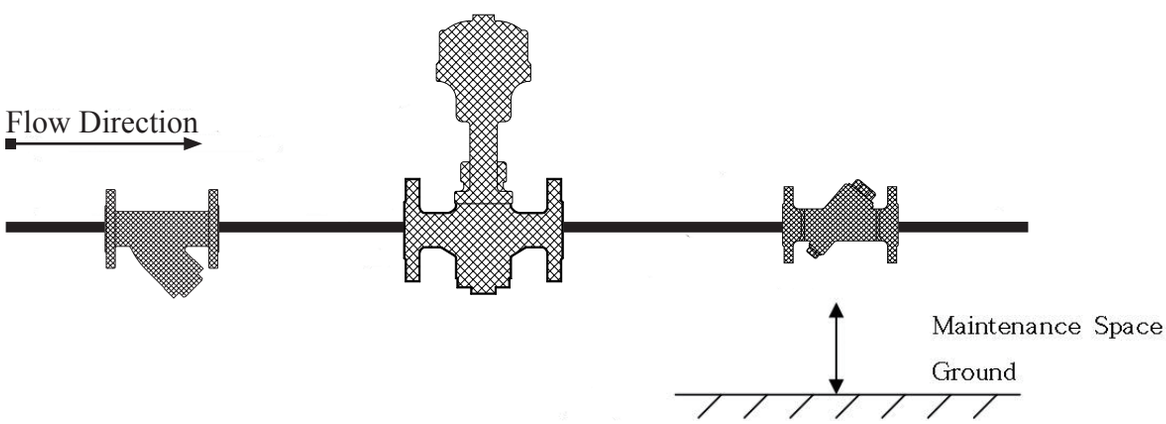

a) The arrow direction of the Lift Check Valve should be same as the flow direction.

b) The valve should be vertical to horizontal piping.

c) Disc Seat is made of PTFE. Lift Check Valve is beneficial and advantageous at high pressure.

LIFT CHECK VALVE

■ V353-F

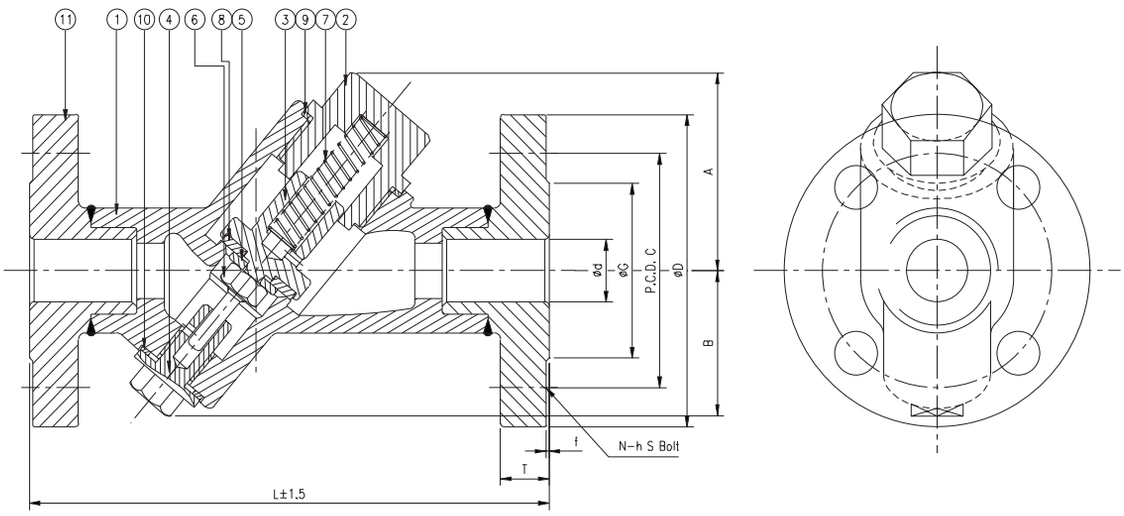

■ DIMENSIONS

(Unit : mm)

Valve Size mm(inch)	port d	L	A	B	Flange Size(JIS 20K RF)							
					D	C	G	T	f	N	h	S
□ 15A(1/2")	15	152	51	38	95	70	51	14	1	4	15	M12
□ 20A(3/4")	20	178	56	45	100	75	56	16	1	4	15	M12
□ 25A(1")	25	203	66	48	125	90	67	16	1	4	19	M16
□ 32A(1-1/4")	32	220	80	52	135	100	76	18	2	4	19	M16
□ 40A(1-1/2")	40	225	85	58	140	105	81	18	2	4	19	M16
□ 50A(2")	50	257	103	70	155	120	96	18	2	8	19	M16
□ 65A(2-1/2")	65	315	130	79	175	140	116	20	2	8	19	M16
□ 80A(3")	80	335	130	79	200	160	132	22	2	8	23	M20

■ PART NAME

NO.	PART NAME
1	BODY
2	COVER
3	DISC
4	PLUG GUIDE
5	DISC SEAT WASHER
6	DISC SET NUT
7	SPRING
8	DISC SEAT
9	COVER GASKET
10	PLUG GASKET
11	FLANGE

LIFT CHECK VALVE

■ V353-S

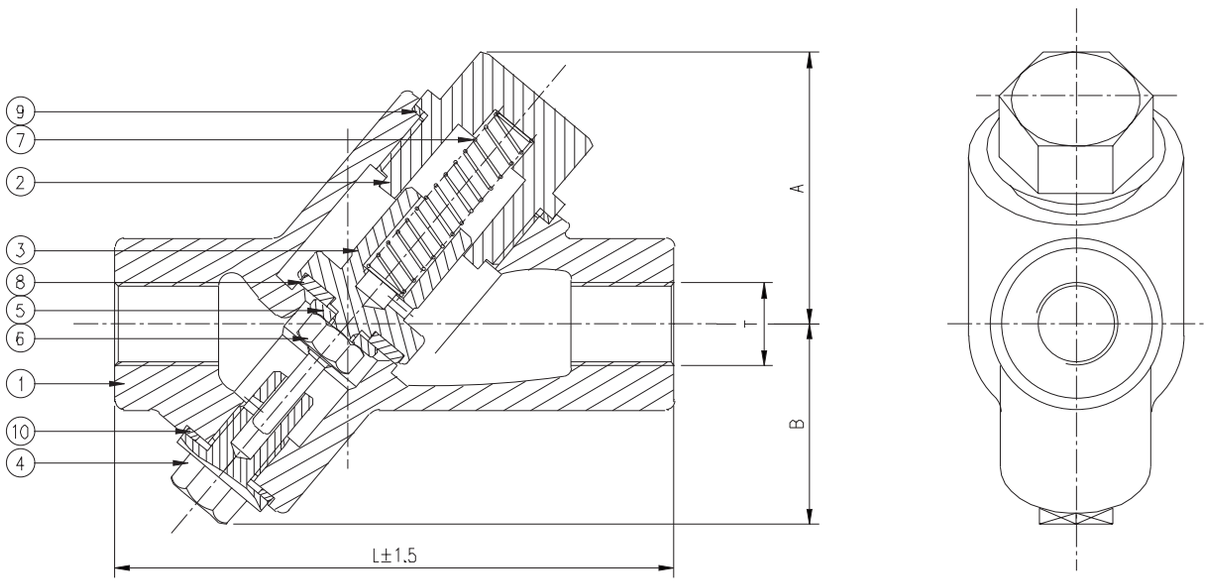

■ DIMENSIONS

(Unit : mm)

Valve Size mm(inch)	Thread T	A	B	L
15A(1/2")	1/2"	51	38	92
20A(3/4")	3/4"	56	45	110
25A(1")	1"	66	48	132
32A(1-1/4")	1-1/4"	80	52	145
40A(1-1/2")	1-1/2"	85	58	177
50A(2")	2"	103	70	215

■ PART NAME

NO.	PART NAME
1	BODY
2	COVER
3	DISC
4	PLUG GUIDE
5	DISC SEAT WASHER
6	DISC SET NUT
7	SPRING
8	DISC SEAT
9	COVER GASKET
10	PLUG GASKET

KNUCKLE JOINT

■ FEATURES

- Knuckle Joint connected with the pipe allows shifting of axial direction, bending of pipeline.
- It rotates 360° and can provide Max 20° Angular movement.
- It is much safer and used longer than flexible hose.
- It is suitable for the high pressure.
- Super seal ring made of Carbon Graphite PTFE allows high sealing to increase the life time.

■ SPECIFICATION

Model Name	Max 20° Angle	VNJ-1	VNJ-2	VNJ-3	VNJ-4
	Fixed	VNJ-1S	VNJ-2S	VNJ-3S	VNJ-4S
Fluids		Steam, Industrial Water, Gas(N_2), Air			
Size (mm)		15A ~ 40A			
End Connection		Threaded			
Material		Stainless Steel			
Temperature		Max.230℃ (446˚F)			
Max Pressure		32㎏/㎠(455psi)			
Body Hydraulic Test		48㎏/㎠(682psi)			

a) PT, NPT, BSPT are available.

b) FCD 450 is available.

KNUCKLE JOINT

■ MAX 20°ANGLE AND FIXED

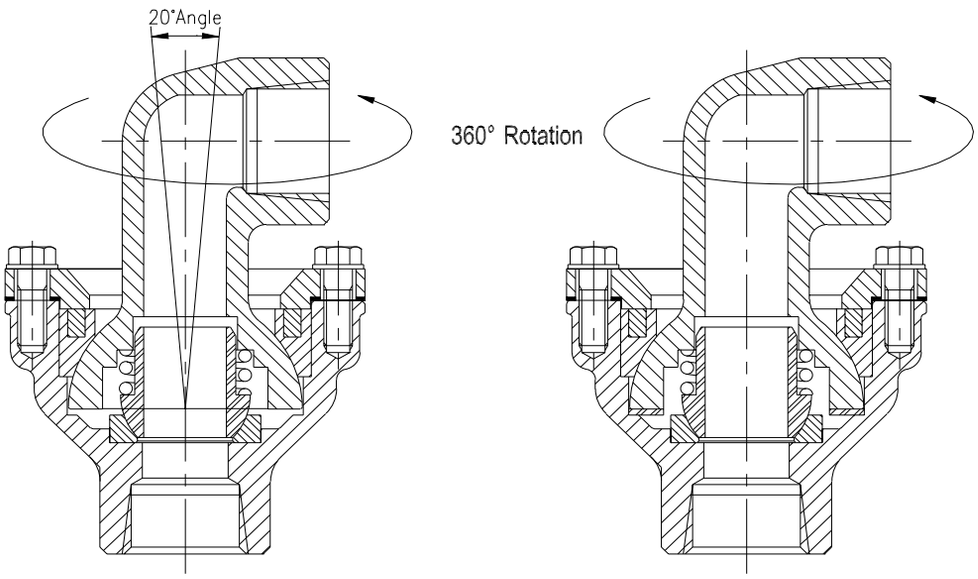

Angle Type
(Without Spacer Ring)

Fixed Type
(With Spacer Ring)

■ INSTALLATION

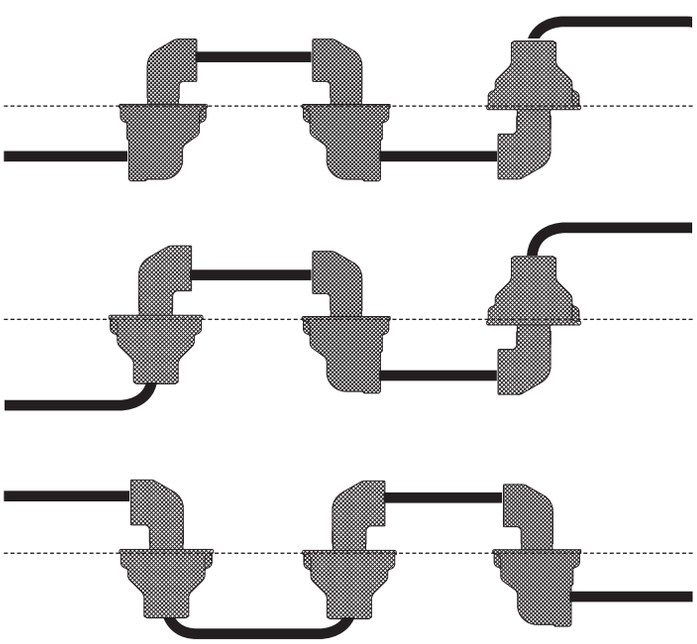

a) Knuckle Joint should be in alignment to the center line.
Normally, VNJ-3 and VNJ-2 are used together.

b) It is possible to connect with the pipe variously.

c) To fix the one side, it needs VNJ-1S, VNJ-2S, VNJ-3S, or VNJ-4S.

KNUCKLE JOINT

■ VNJ-1(S)

- VNJ-1 WITHOUT SPACER RING
- VNJ-1S WITH SPACER RING

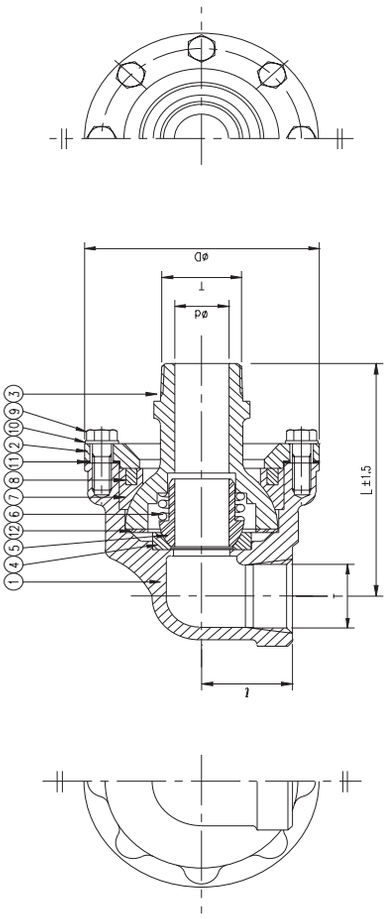

■ VNJ-2(S)

- VNJ-2 WITHOUT SPACER RING
- VNJ-2S WITH SPACER RING

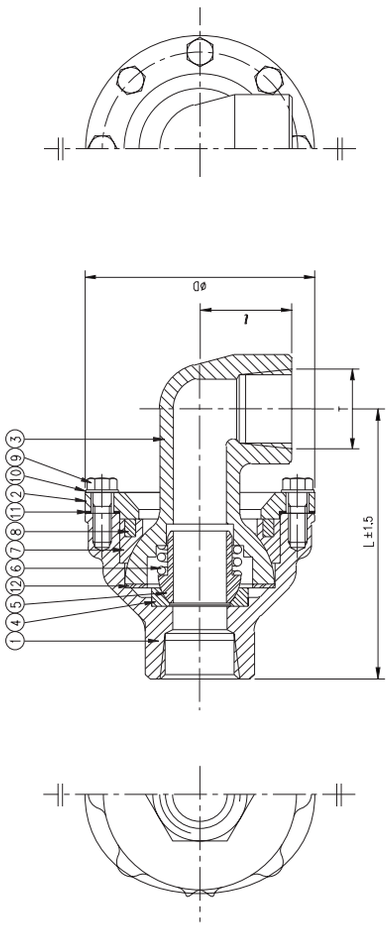

■ DIMENSIONS

(Unit : mm)

	Valve Size mm(inch)	Thread T	d	D	L	l
□	15A(1/2")	1/2"	14	70	84	30
□	20A(3/4")	3/4"	19	85	103	30
□	25A(1")	1"	23	100	110	38
□	32A(1-1/4")	1-1/4"	30	114	131	45
□	40A(1-1/2")	1-1/2"	36	126	140	55

(Unit : mm)

	Valve Size mm(inch)	Thread T	D	L	l
□	15A(1/2")	1/2"	70	83	30
□	20A(3/4")	3/4"	85	101	30
□	25A(1")	1"	100	122	38
□	32A(1-1/4")	1-1/4"	114	145	45
□	40A(1-1/2")	1-1/2"	126	151	55

■ PART NAME

NO.	PART NAME
1	BODY
2	COVER
3	BALL JOINT
4	BALL WASHER
5	INNER BALL
6	SPRING
7	SEAL RING
8	RING
9	BOLT
10	SPACER WASHER
11	GASKET
12	SPACER RING

NO.	PART NAME
1	BODY
2	COVER
3	BALL JOINT
4	BALL WASHER
5	INNER BALL
6	SPRING
7	SEAL RING
8	RING
9	BOLT
10	SPACER WASHER
11	GASKET
12	SPACER RING

KNUCKLE JOINT

■ VNJ-3(S)

- VNJ-3 WITHOUT SPACER RING
- VNJ-3S WITH SPACER RING

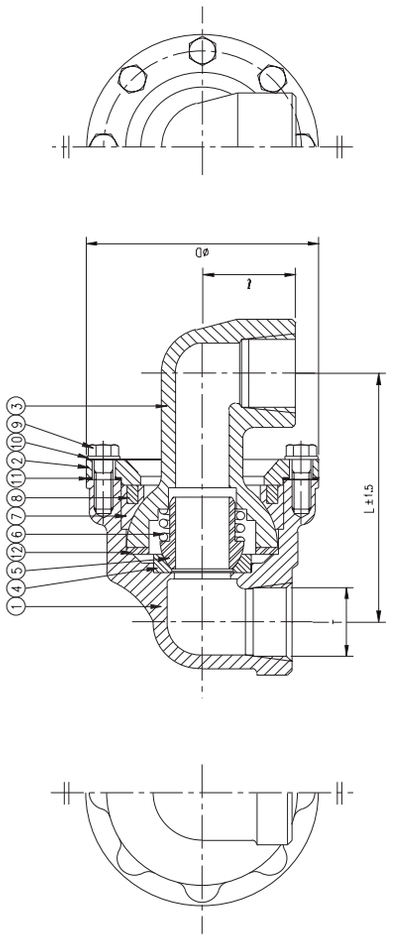

■ VNJ-4(S)

- VNJ-4 WITHOUT SPACER RING
- VNJ-4S WITH SPACER RING

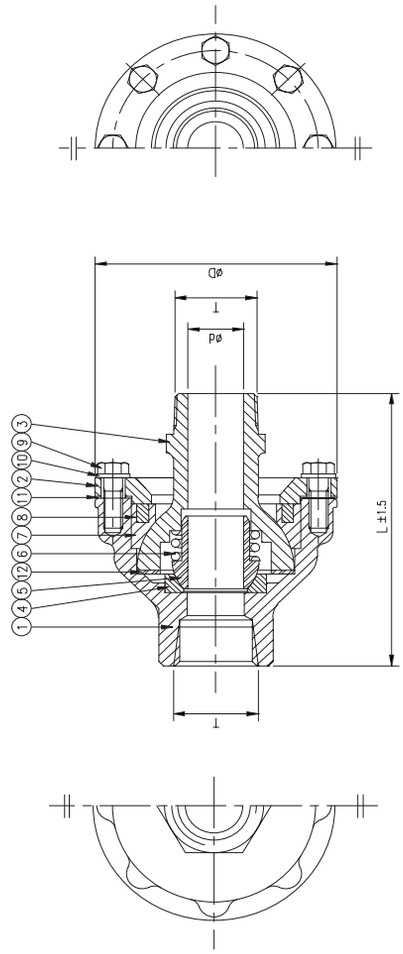

■ DIMENSIONS

(Unit : mm)

	Valve Size mm(inch)	Thread T	D	L	l
□	15A(1/2")	1/2"	70	76	30
□	20A(3/4")	3/4"	85	98	30
□	25A(1")	1"	100	112	38
□	32A(1-1/4")	1-1/4"	114	140	45
□	40A(1-1/2")	1-1/2"	126	141	55

(Unit : mm)

	Valve Size mm(inch)	Thread T	d1	D	L	l
□	15A(1/2")	1/2"	14	70	91	30
□	20A(3/4")	3/4"	19	85	106	30
□	25A(1")	1"	23	100	120	38
□	32A(1-1/4")	1-1/4"	30	114	136	45
□	40A(1-1/2")	1-1/2"	36	126	148	55

■ PART NAME

NO.	PART NAME
1	BODY
2	COVER
3	BALL JOINT
4	BALL WASHER
5	INNER BALL
6	SPRING
7	SEAL RING
8	RING
9	BOLT
10	SPACER WASHER
11	GASKET
12	SPACER RING

NO.	PART NAME
1	BODY
2	COVER
3	BALL JOINT
4	BALL WASHER
5	INNER BALL
6	SPRING
7	SEAL RING
8	RING
9	BOLT
10	SPACER WASHER
11	GASKET
12	SPACER RING

4-WAY PISTON VALVE

■ FEATURES

- The valve is connected with water hydraulic cylinder and operates it.
- Internal design to increase the life time of o-ring.
- The valve can save other valve use.

■ SPECIFICATION

Model Name	V4010S-S	V4010S-D	V4020S-S	V4020S-D
Fluids	Industrial Water			
Size(mm)	8A, 10A		15A, 20A	
Operation	Single Acting	Double Acting	Single Acting	Double Acting
End Connection	Threaded			
Material	Body : Stainless Steel			
Air Supply	2.5 ~ 3.5㎏/㎠ (36~50psi)			
Temperature	Max.70℃ (158˚F)			
Max Pressure	32 ㎏/㎠ (455psi)			
Body Hydraulic Test	48 ㎏/㎠ (682psi)			

a) PT, NPT, BSPT are available.

b) Bronze is available but the temperature and pressure should be changed.

4-WAY PISTON VALVE

■ INSTALLATION

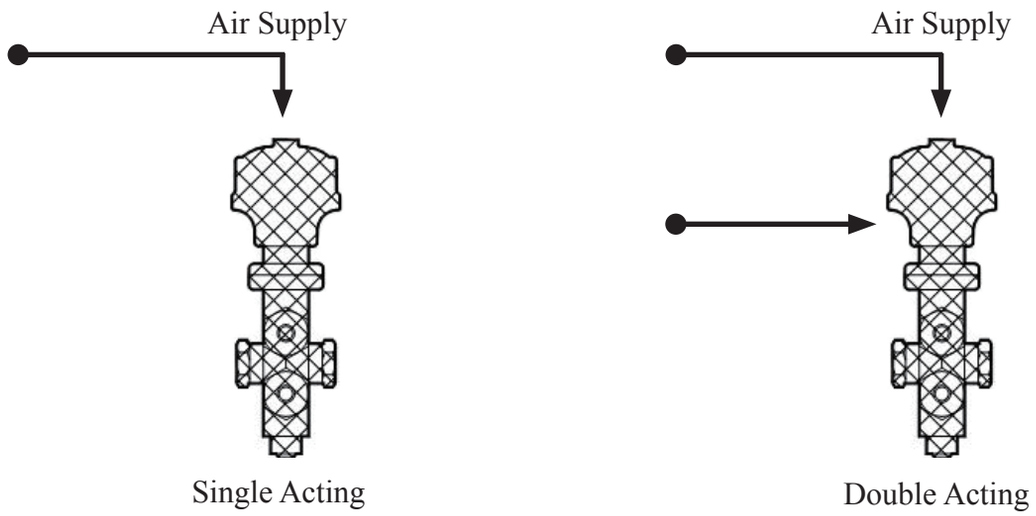

a) Single Acting has one spring.

b) Double Acting has no spring therefore, it needs the 2 air supply lines.

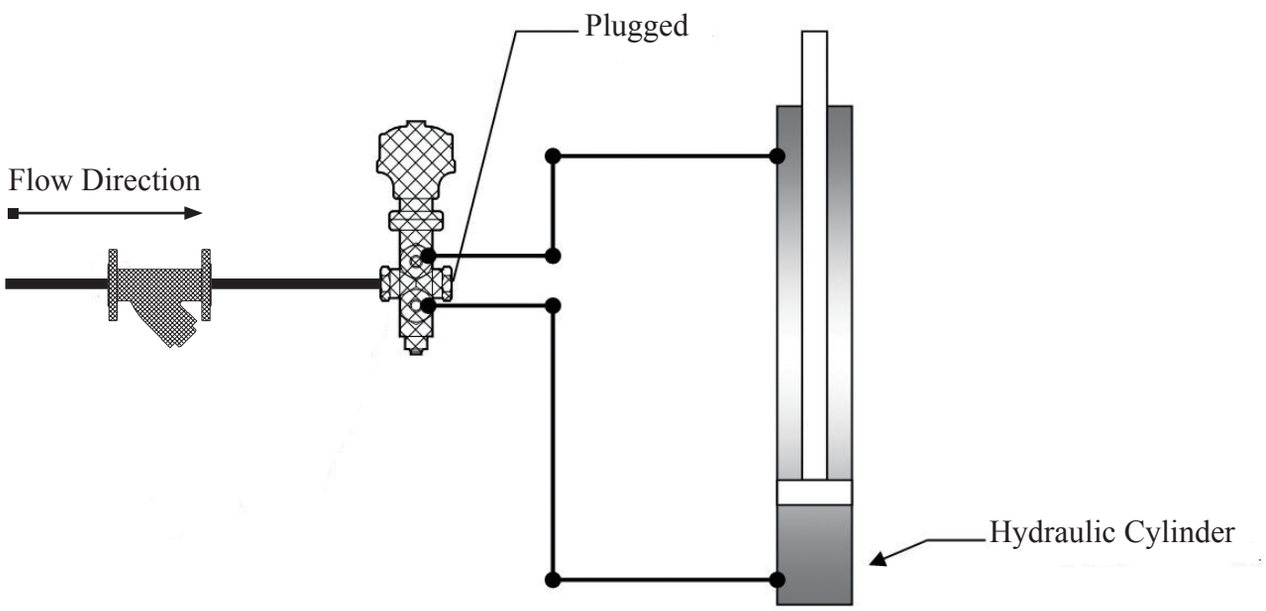

a) The fluid is water.

b) The O-ring is easy to get damage. The strainer should be installed before the valve.

c) The speed of the hydraulic cylinder can be changed according to the water pressure.

4-WAY PISTON VALVE

■ V4010S-S
■ V4020S-S

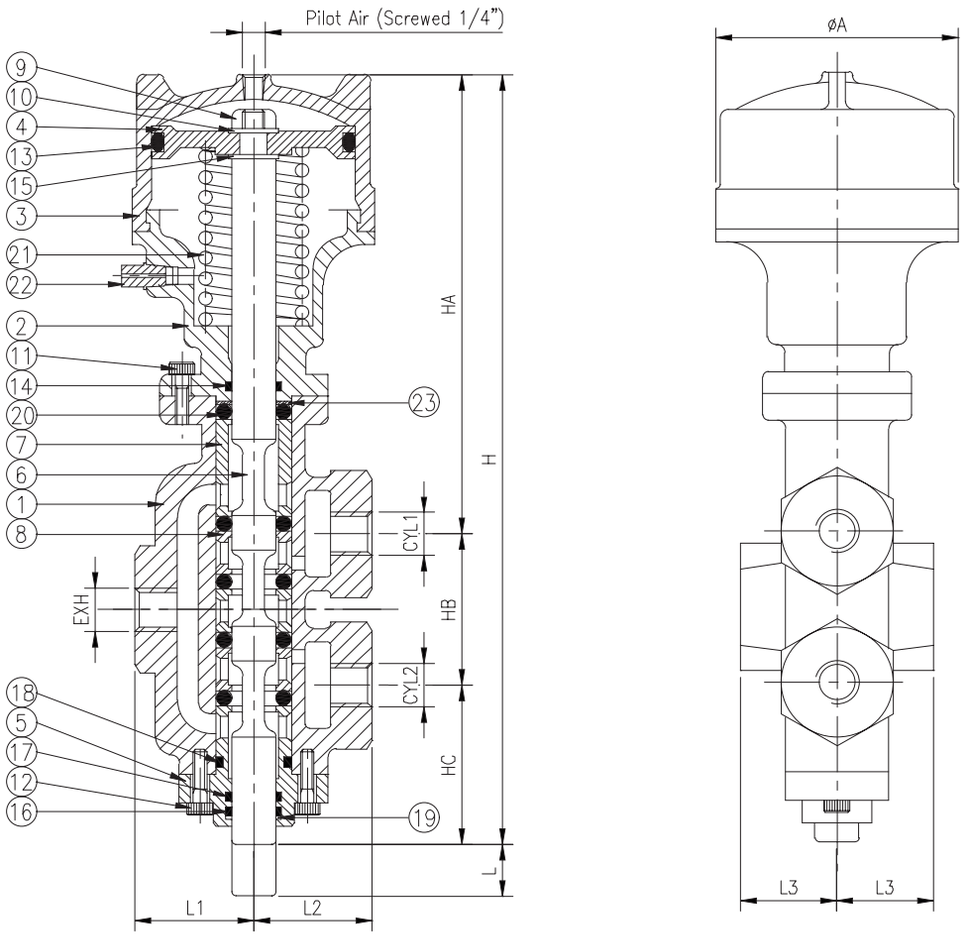

■ DIMENSIONS

■ V4010S-S (Unit : mm)

Valve Size mm(inch)	L1	L2	L3	A	HA	HB	HC	H	LIFT
□ 8A(1/4")	33	30	30	81	135	40	43	218	17.5
□ 10A(3/8")	33	30	30	81	135	40	43	218	17.5

■ V4020S-S (Unit : mm)

Valve Size mm(inch)	L1	L2	L3	A	HA	HB	HC	H	LIFT
□ 15A(1/2")	43	43	35	88	171	56	57	284	22
□ 20A(3/4")	43	43	35	88	171	56	57	284	22

■ PART NAME

NO.	PART NAME	NO.	PART NAME	NO.	PART NAME
1	BODY	11	SOCKET SCREW BOLT	21	SPRING
2	CYLINDER COVER	12	SOCKET SCREW BOLT	22	PLUG
3	CYLINDER	13	O-RING	23	RING WASHER
4	PISTON	14	O-RING		
5	HEAD COVER	15	PISTON ROD GASKET		
6	PISTON ROD	16	O-RING		
7	LONG LANTERN RING	17	O-RING		
8	LANTERN RING	18	O-RING		
9	PISTON ROD NUT	19	BACK-UP RING		
10	SPRING WASHER	20	O-RING		

4-WAY PISTON VALVE

■ V4010S-D
■ V4020S-D

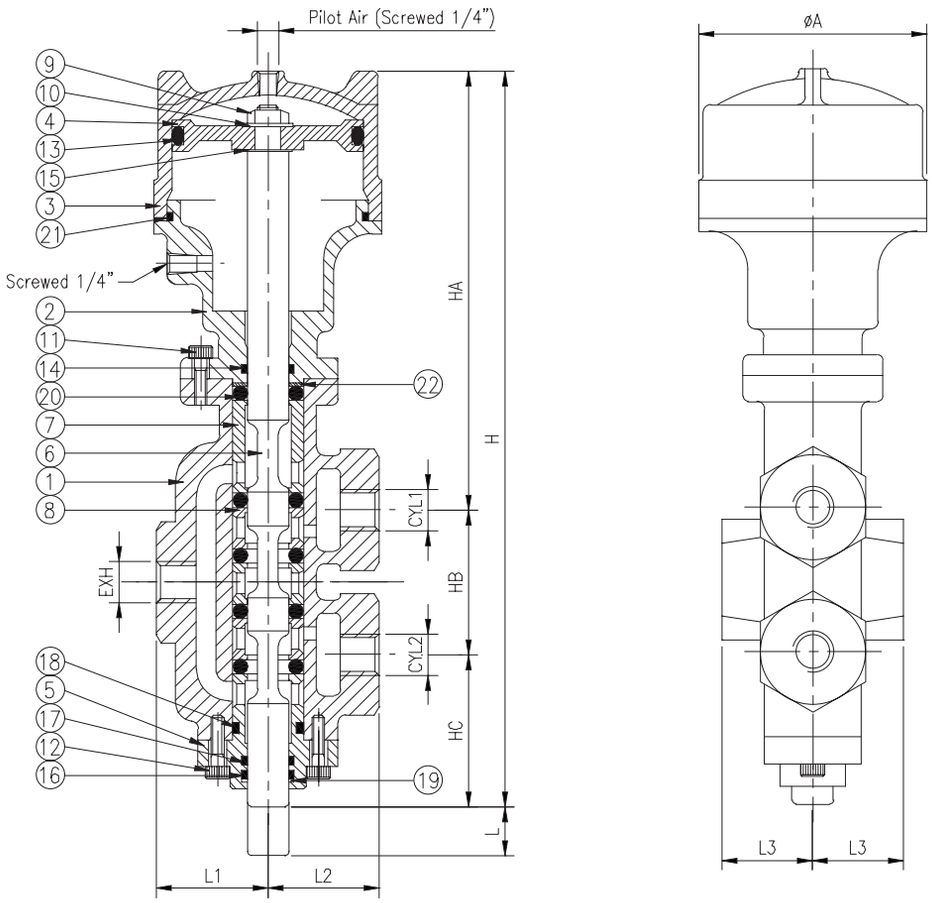

■ DIMENSIONS

■ V4010S-D (Unit : mm)

Valve Size mm(inch)	L1	L2	L3	A	HA	HB	HC	H	LIFT
□ 8A(1/4")	33	30	30	81	135	40	43	218	17.5
□ 10A(3/8")	33	30	30	81	135	40	43	218	17.5

■ V4020S-D (Unit : mm)

Valve Size mm(inch)	L1	L2	L3	A	HA	HB	HC	H	LIFT
□ 15A(1/2")	43	43	35	88	171	56	57	284	22
□ 20A(3/4")	43	43	35	88	171	56	57	284	22

■ PART NAME

NO.	PART NAME	NO.	PART NAME	NO.	PART NAME
1	BODY	11	SOCKET SCREW BOLT	21	O-RING
2	CYLINDER COVER	12	SOCKET SCREW BOLT	22	RING WASHER
3	CYLINDER	13	O-RING		
4	PISTON	14	O-RING		
5	HEAD COVER	15	PISTON ROD GASKET		
6	PISTON ROD	16	O-RING		
7	LONG LANTERN RING	17	O-RING		
8	LANTERN RING	18	O-RING		
9	PISTON ROD NUT	19	BACK-UP RING		
10	SPRING WASHER	20	O-RING		

STRAINER

■ FEATURES

- The strainer filters foreign material in the pipe line.
- The Y-type design to minimize the pressure loss.
- All parts are stainless steel suitable for high temperature and high pressure.

■ SPECIFICATION

Model Name	VST-500S	VST-500F	VST-500FS
Fluids	Steam, Industrial Water, Gas(N_2), Air		
Size	15A~50A	15A~80A	
End Connection	Threaded	Flanged (A105)	Flanged (SCS13)
Material	Body, Screen : Stainless Steel		
Screen	ø3.0 x 5.0 P		
Mounting	Horizontal		
Temperature	Max.230℃ (446℉)		
Pressure	Max.32㎏/㎠ (455psi)		
Body Hydraulic Test	Max.48 ㎏/㎠ (682psi)		

a) JIS, ANSI, DIN are available.

b) Various perforated hole rate is available.

c) Mesh is available.

d) Available for High Pressure (JIS 30K).

■ STANDARD PERFORATED SCREEN

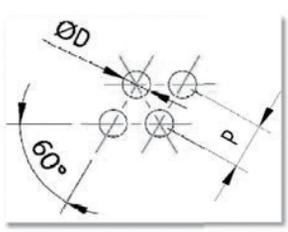

N : Porous Ratio

P : Pitch

D : Diameter

$N=0.91 \times \left(\frac{D}{P}\right)^2$

Valas Standard Screen ;

$N=0.91 \times \left(\frac{3}{5}\right)^2 = 0.3276 \fallingdotseq 33\%$

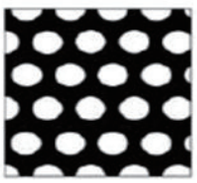

Ø3.0 x 5.0 P

33% Opening

a) Various perforated hole rate is available.

STRAINER

■ INSTALLATION

● Horizontal Installation

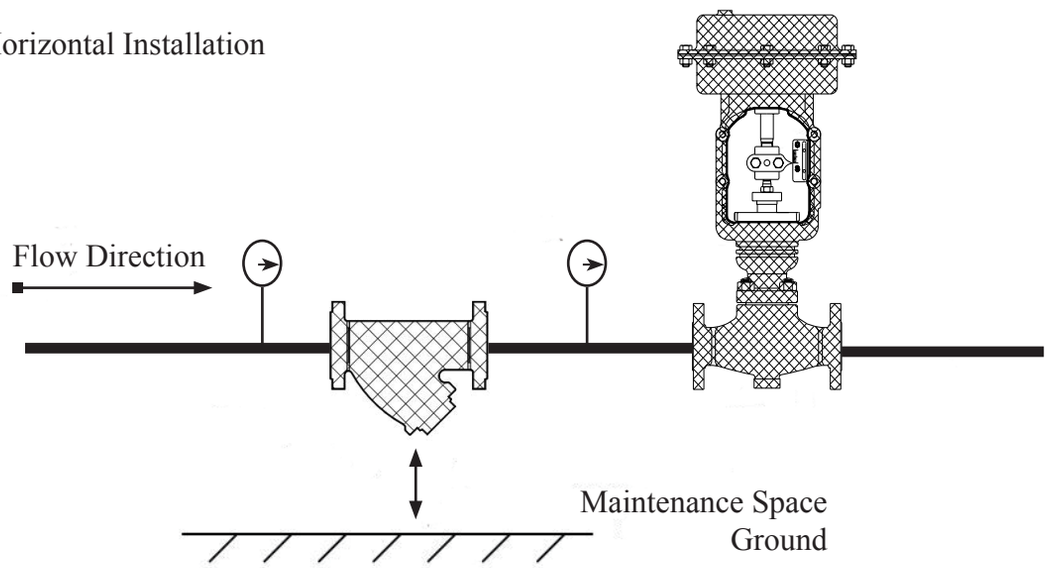

● Vertical Installation

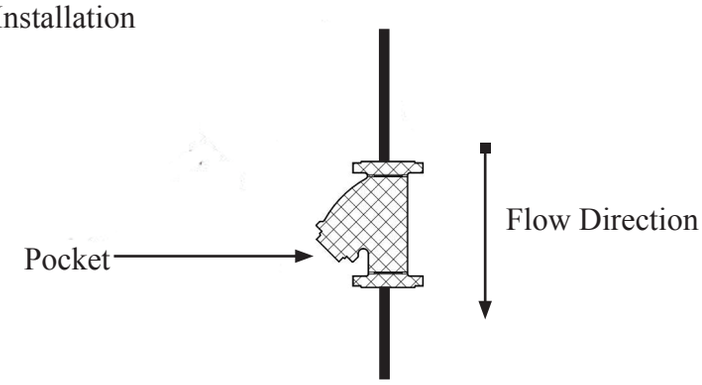

a) It should be installed prior to the important valve.

b) In the steam line, the ball valve at the pocket can be connected to drain the condensation to prevent water hammer and foreign material.

c) The arrow direction of the strainer should be same as the flow direction.

d) The line should have an enough room to clean the strainer.

e) If the difference of both sides pressure increases, the user should remove the foreign material inside of the strainer.

f) It should be installed vertically to horizontal piping and also it is available to vertical piping.

g) Especially in the steam line, the pocket of strainer should be placed horizontally not to make the condensation in the pocket.

h) The strainer in vertical piping should be placed with the pocket in the downward.

STRAINER

■ VST-500F

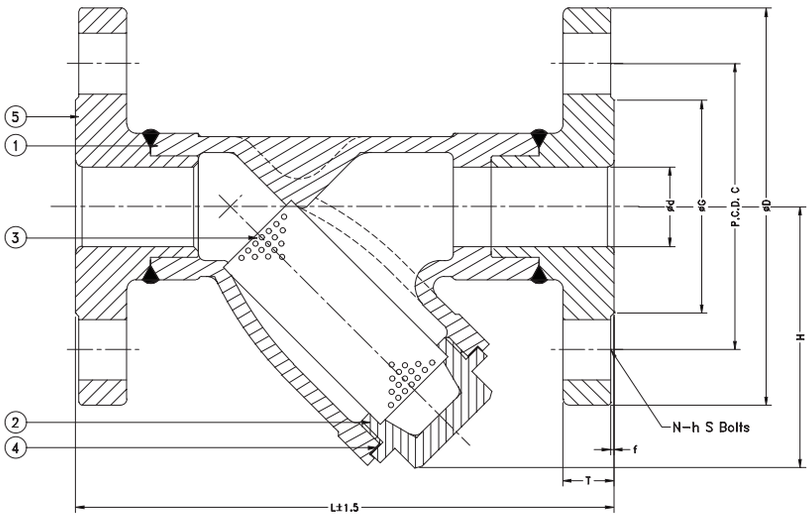

15A, 20A, 25A, 32A, 40A, 50A

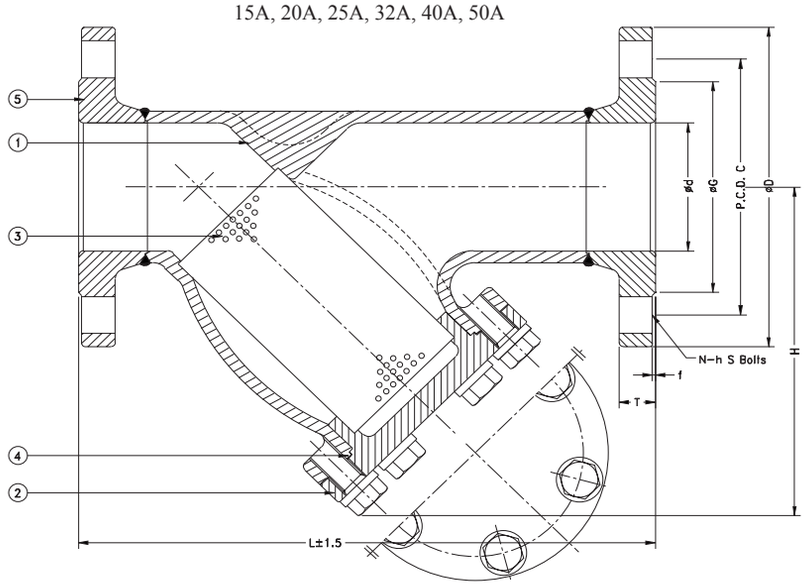

65A, 80A

■ DIMENSIONS

(Unit : mm)

Valve Size mm(inch)	d	H	L	Flange Size(JIS 20K RF)							
				D	C	G	T	f	N	h	S
□ 15A(1/2")	15	55.5	141	95	70	51	14	1	4	15	M12
□ 20A(3/4")	20	70.5	150	100	75	56	16	1	4	15	M12
□ 25A(1")	25	82.0	172	125	90	67	16	1	4	19	M16
□ 32A(1-1/4")	32	99.0	198	135	100	76	18	2	4	19	M16
□ 40A(1-1/2")	40	122.5	220	140	105	81	18	2	4	19	M16
□ 50A(2")	50	140.0	242	155	120	96	18	2	8	19	M16
□ 65A(2-1/2")	65	206.0	327	175	140	116	20	2	8	19	M16
□ 80A(3")	80	206.0	347	200	160	132	22	2	8	23	M20

■ PART NAME

NO.	PART NAME
1	BODY
2	PLUG
3	SCREEN
4	GASKET
5	FLANGE

STRAINER

■ VST-500S

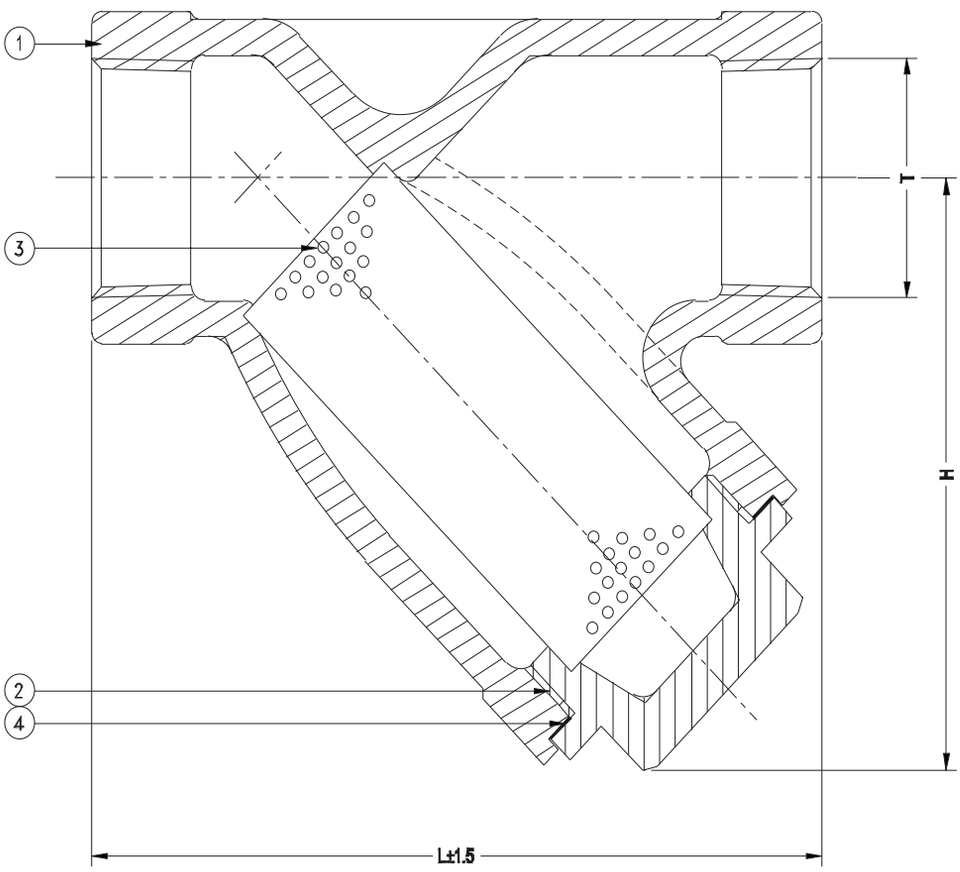

■ DIMENSIONS

(Unit : mm)

Valve Size mm(inch)	Thread T	L	H
15A(1/2")	1/2"	80	55.5
20A(3/4")	3/4"	95	70.5
25A(1")	1"	110	82.0
32A(1-1/4")	1-1/4"	135	99.0
40A(1-1/2")	1-1/2"	160	122.5
50A(2")	2"	177	140.0

■ PART NAME

NO.	PART NAME
1	BODY
2	PLUG
3	SCREEN
4	GASKET

LIQUID EJECTOR

■ FEATURES

- Ejector obtains suction pressures by making vacuum in chamber of body.
- Simple construction different with other kinds of pumps.
- Capability of handling enormous volumes of fluids in relatively small sizes of equipment.
- Less and easy maintenance requirement.
- Simple Operation.

■ SPECIFICATION

Model Name	VLE-2540S	VLE-4050S
Fluids	Industrial Water, Gas(N_2), Air	
Size(mm)	25A x 40A	40A x 50A
Material	Body : Stainless Steel	
Mounting	Horizontal	
Temperature	Max.230℃(446˚F)	
Max Pressure	32 ㎏/㎠ (455psi)	
Body Hydraulic Test	48 ㎏/㎠ (682psi)	

a) Bronze body is available but the temperature and pressure should be changed.

LIQUID EJECTOR

■ SUCTION AMOUNT

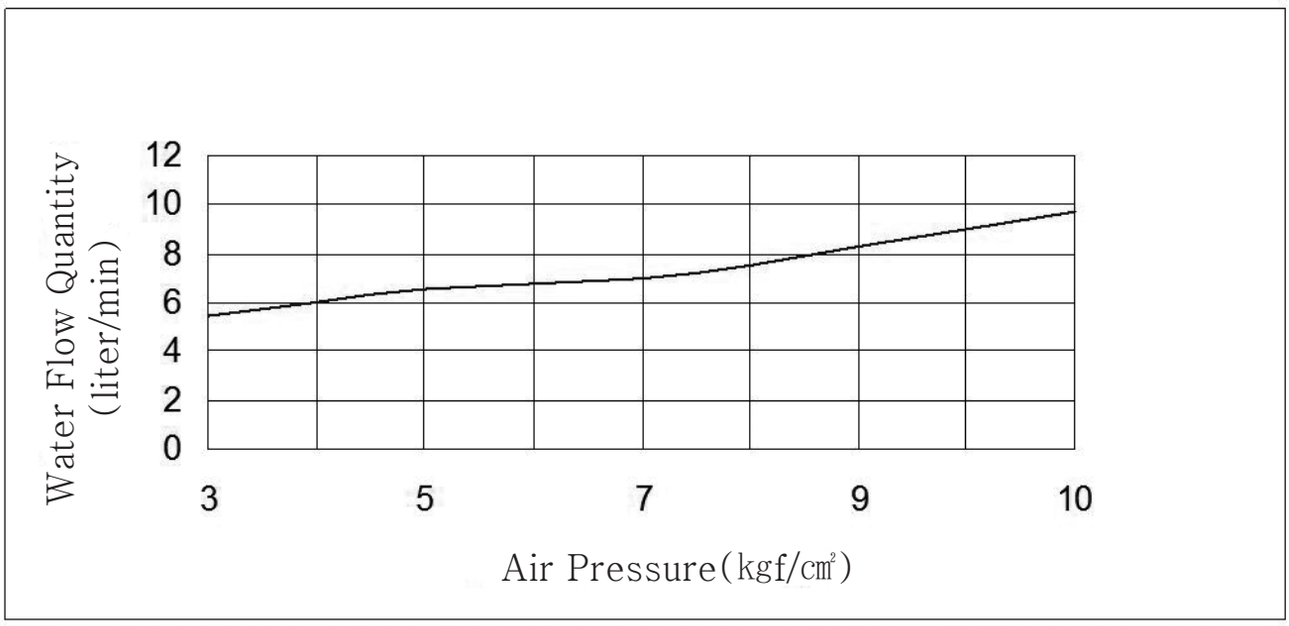

a) Motive Fluid: Air.

b) Suction : Water.

c) The data can be changed at the actual line.

■ INSTALLATION

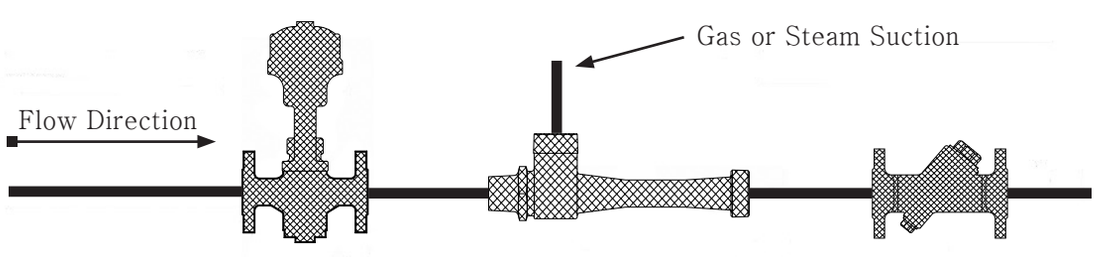

a) Nozzle is connected with Motive Fluid.

b) Lift check valve is installed to prevent the reverse flow.

LIQUID EJECTOR

■ VLE-2540S
■ VLE-4050S

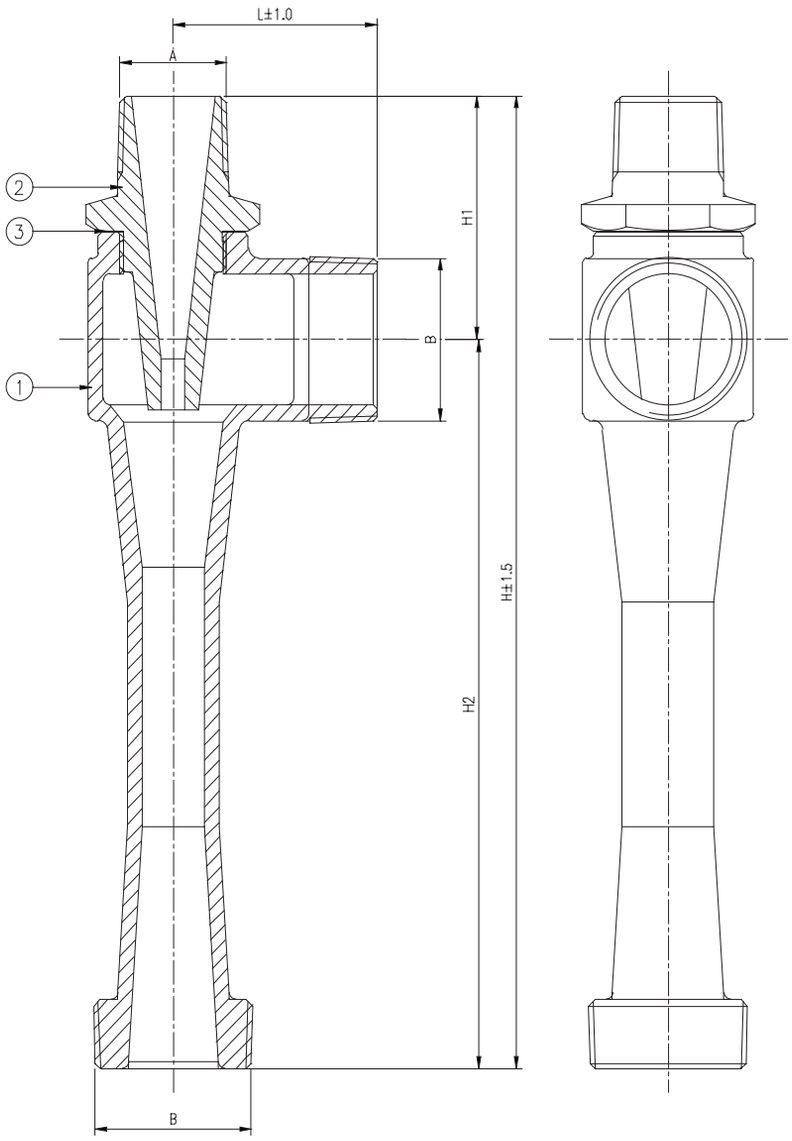

■ DIMENSIONS

■ VLE-2540S (Unit : mm)

Valve Size	A	B	L	H1	H2	H
1"*1-1/2"	1"	1-1/2"	66	72	218	290

■ VLE-4050S (Unit : mm)

Valve Size	A	B	L	H1	H2	H
1-1/2"*2"	1-1/2"	2"	66	72	218	290

■ PART NAME

NO.	PART NAME
1	BODY
2	NOZZLE
3	GASKET

PAN CHECK VALVE

■ FEATURES

- Pan check valves are smaller, lighter and cost less.
- If the differential pressure across the valve falls below the required opening pressure, the spring helps the valve slam shut automatically.
- The design of pan check valve allows them to be installed in any position, including vertical pipelines where the fluid flows downwards.

■ SPECIFICATION

Model Name	V300-M
Fluids	Steam, Industrial Water, Gas(N_2), Air
Size(mm)	15A~40A
Material	Body, Disc : Stainless Steel
Opening Pressure	Min. 0.05 kg/㎠(0.7psi)
Mounting	Horizontal, Vertical
Temperature	Max.230℃(446˚F)
Max Pressure	Max.32 kg/㎠(455psi)
Body Hydraulic Test	Max.48 kg/㎠(682psi)

a) Min Opening Pressure can be arranged according to the clients request.

■ OPENING PRESSURE

Size mm(inch)	Opening Pressures (kg/㎠)		
	Direction of flow with spring		
	↑	→	↓
15A(1/2")	0.053	0.050	0.050
20A(3/4")	0.053	0.050	0.045
25A(1")	0.054	0.050	0.044
32A(1-1/4")	0.053	0.050	0.045
40A(1-1/2")	0.054	0.050	0.044

PAN CHECK VALVE

■ INSTALLATION

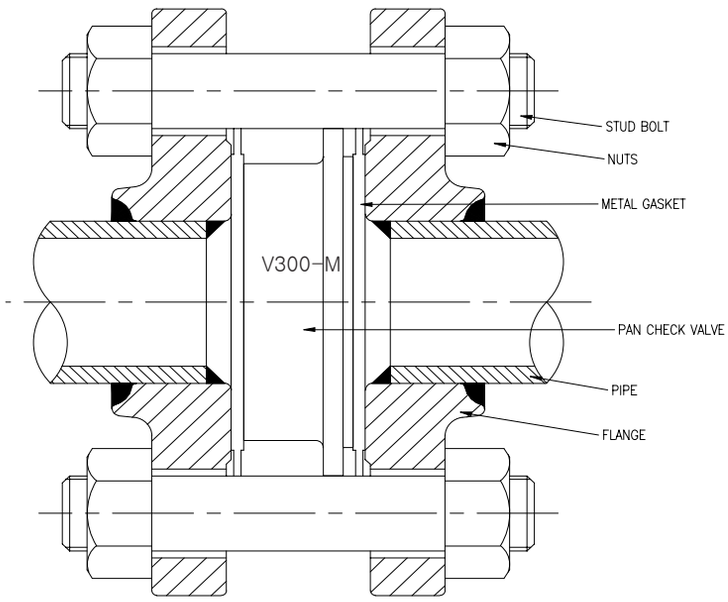

a) Bolt (JIS 20K RF)

Size mm(inch)	15A (1/2")	20A (3/4")	25A (1")	32A (1-1/4")	40A (1-1/2")
Bolt	M12 x 96mm	M12 x 109mm	M16 x 117mm	M16 x 128mm	M16 x 147mm
Quantity	4	4	4	4	4

b) Pan Check Valve should not be used on applications where there is heavily pulsating flow.

c) Disc Seat is made of Stainless Steel.

d) B7 Stud bolt and nuts are suitable.

PAN CHECK VALVE

■ V300-M

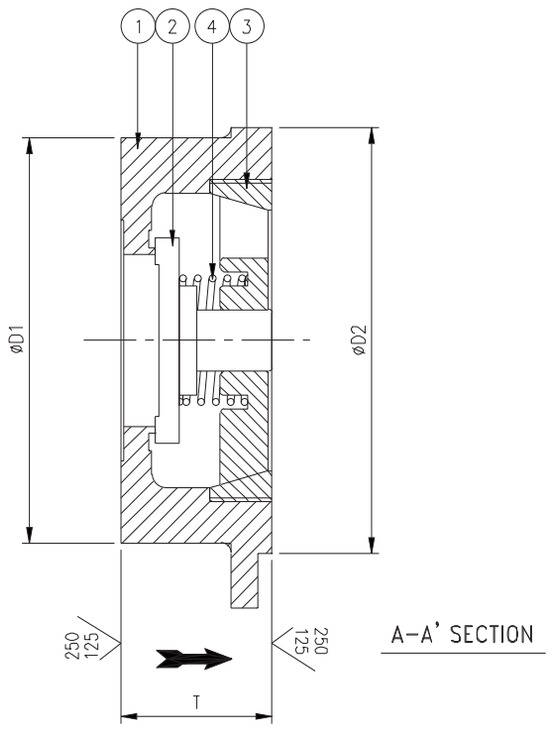

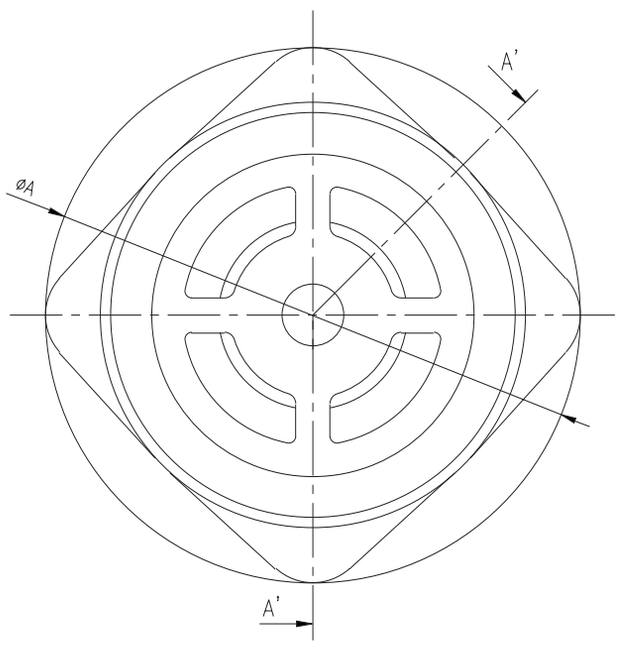

■ DIMENSIONS

(Unit : mm)

	Valve Size mm(inch)	d	A	T	D1	D2
□	15A(1/2")	15	62	16	45	48
□	20A(3/4")	20	70	19	50	54
□	25A(1")	25	78	22	59	62
□	32A(1-1/4")	32	88	28	68	72
□	40A(1-1/2")	40	102	32	80	84

■ PART NAME

NO.	PART NAME
1	BODY
2	DISC
3	SPRING PLATE
4	SPRING

Ordering Information

3-Way & 2-Way Piston Valve	41
Control Valve	42
Pressure Regulator Valve	43
Knuckle Joint	44
Check Valve	45
Strainer	46
4-Way Piston Valve	47
Liquid Ejector	48

Valas Brand	Piston Valve		—	Description			—	Size
V	P		—				—	

NONE	A105 Flange
S	Stainless Steel Flange
N	No Welding Flange and Body

R	Reverse (Normal Close)
D	Direct (Normal Open)

S	Screw
F	Flange

2W	2-Way (With Plug or Without Plug)
3W	3-Way
S2W	2-Way, One Stem
S3W	3-Way, One Stem
H2W	2-Way, High Pressure(JIS 30K RF)
H3W	3-Way, High Pressure(JIS 30K RF)
U3W	3-Way, High Pressure(JIS 63K RF. SCS 13 Flange)

mm	8A	10A	15A	20A	25A	32A	40A	50A	65A	80A
inch	1/4"	3/8"	1/2"	3/4"	1"	1-1/4"	1-1/2"	2"	2-1/2"	3"

* Screw : PT, BSPT, BSP, NPT, NPTF
* Flange : JIS, DIN, ANSI(10K, 20K, 30K Flange)

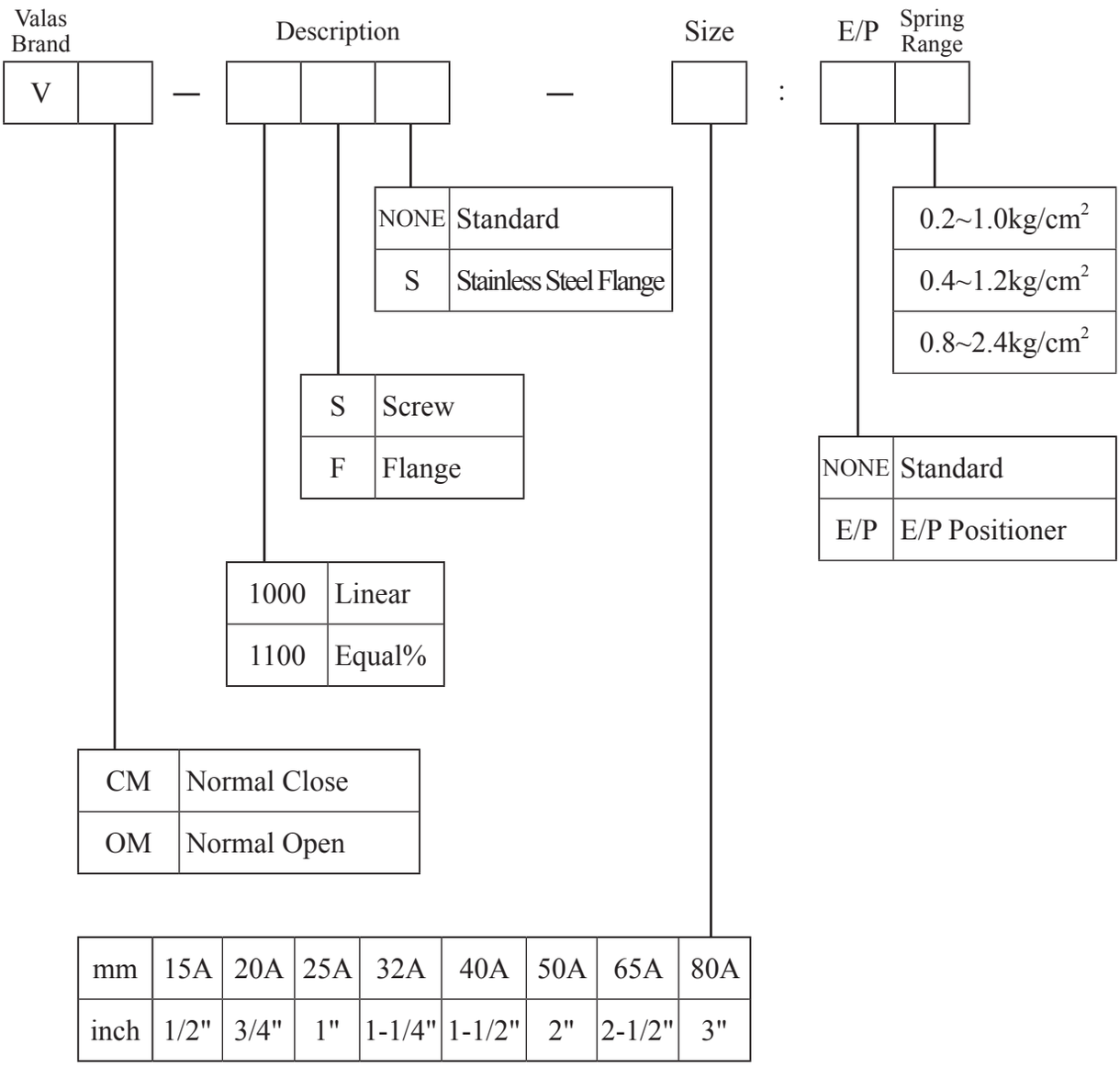

* Screw : PT, BSPT, BSP, NPT, NPTF
* Flange : JIS, DIN, ANSI(10K, 20K, 30K Flange)

Steam Regulator Valve		Description			Size
SRV	—	1100			

NONE	Standard
S	Stainless Steel Flange

S	Screw
F	Flange

mm	15A	20A	25A	40A	50A
inch	1/2"	3/4"	1"	1-1/2"	2"

* Screw : PT, BSPT, BSP, NPT, NPTF
* Flange : JIS, DIN, ANSI(10K, 20K, 30K Flange)

Valas Brand	Kunckle Joint		Description			Size
V	NJ	—			—	

NONE	20˚ Angle
S	No Angle(Fixed)

1	90˚	Refer To Drawing
2	90˚	
3	180˚	
4	0˚	

mm	15A	20A	25A	32A	40A
inch	1/2"	3/4"	1"	1-1/4"	1-1/2"

* Screw : PT, BSPT, BSP, NPT, NPTF

Valas Brand			Description			Size
V		–			–	

NONE	Standard
S	Stainless Steel Flange

S	Screw
F	Flange
M	Metal Disc Type

3 5 3	Lift Check Valve
3 0 0	Pan Check Valve
H 3 5 3	High Pressure(JIS 30K RF)

mm	15A	20A	25A	32A	40A	50A	65A	80A
inch	1/2"	3/4"	1"	1-1/4"	1-1/2"	2"	2-1/2"	3"

* Screw : PT, BSPT, BSP, NPT, NPTF
* Flange : JIS, DIN, ANSI(10K, 20K, 30K Flange)

Valas Brand	Strainer		Description				Size
V	ST	–				–	

NONE	Standard
S	Stainless Steel Flange

S	Screw
F	Flange

5 0 0	Cast Stainless Steel
H 5 0 0	High Pressure (JIS 30K RF)

mm	15A	20A	25A	32A	40A	50A	65A	80A
inch	1/2"	3/4"	1"	1-1/4"	1-1/2"	2"	2-1/2"	3"

* Screw : PT, BSPT, BSP, NPT, NPTF
* Flange : JIS, DIN, ANSI(10K, 20K, 30K Flange)

Valas Brand	4-WAY PISTON	Description		Size
V	40	–	–	

S	Single Type (With Spring)
D	Double Type(Without Spring)

10S	SCS 13	Application for 1/4", 3/8"
20S	SCS 13	Application for 1/2", 3/4"
10	BC	Application for 1/4", 3/8"
20	BC	Application for 1/2", 3/4"

mm	8A	10A	15A	20A
inch	1/4"	3/8"	1/2"	3/4"

* Screw : PT, BSPT, BSP, NPT, NPTF

Valas Brand	Liguid Ejector	Description
V	LE	

CODE	BODY	INCH	END CONN'
2540S	SCS 13	1" × 1-1/2"	Screw
2540SF	SCS 13	1" × 1-1/2"	Flange
4050S	SCS 13	1-1/2" × 2"	Screw
4050SF	SCS 13	1-1/2" × 2"	Flange
2540	BC	1" × 1-1/2"	Screw
2540FN	BC	1" × 1-1/2"	Flange

* Screw : PT, BSPT, BSP, NPT, NPTF
* Flange : JIS, DIN, ANSI(10K, 20K, 30K Flange)